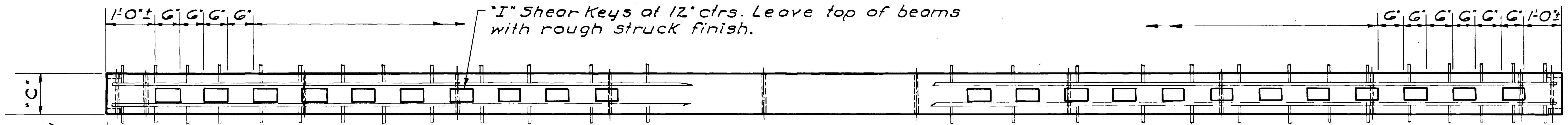

PLAN

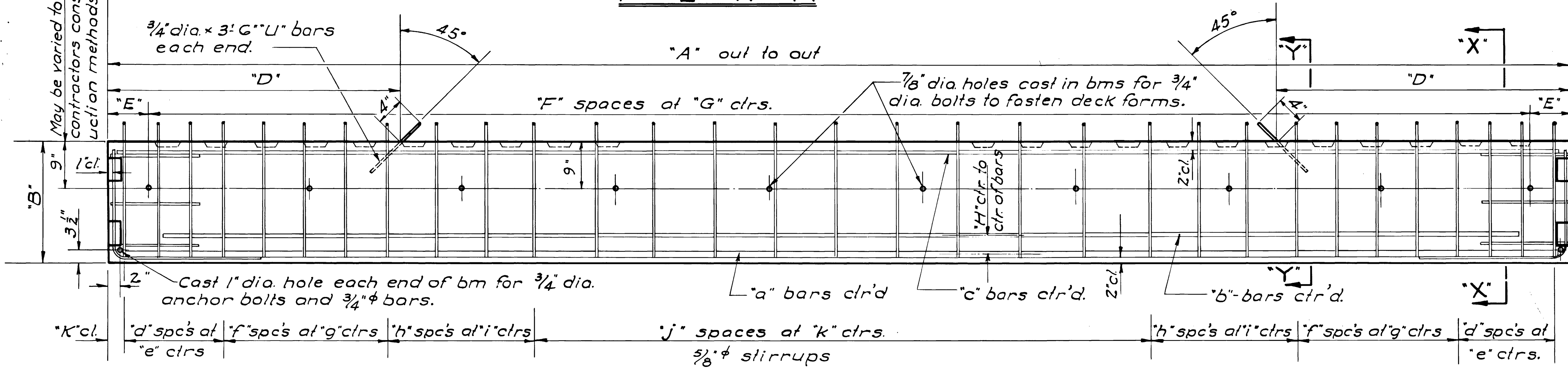

NOTE:
PRECAST BEAMS MUST BE KEPT IN UPRIGHT POSITION AT ALL TIMES.

ELEVATION

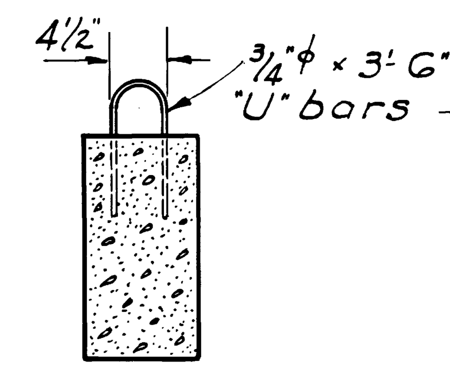

SECTION "Y-Y"

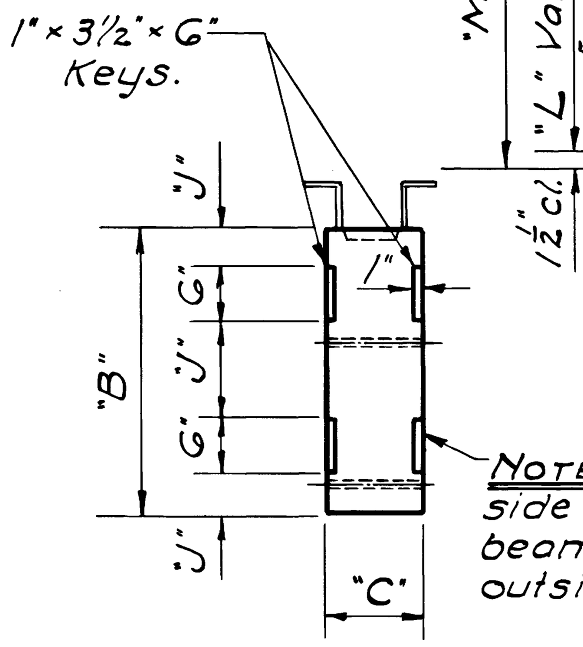

END ELEVATION

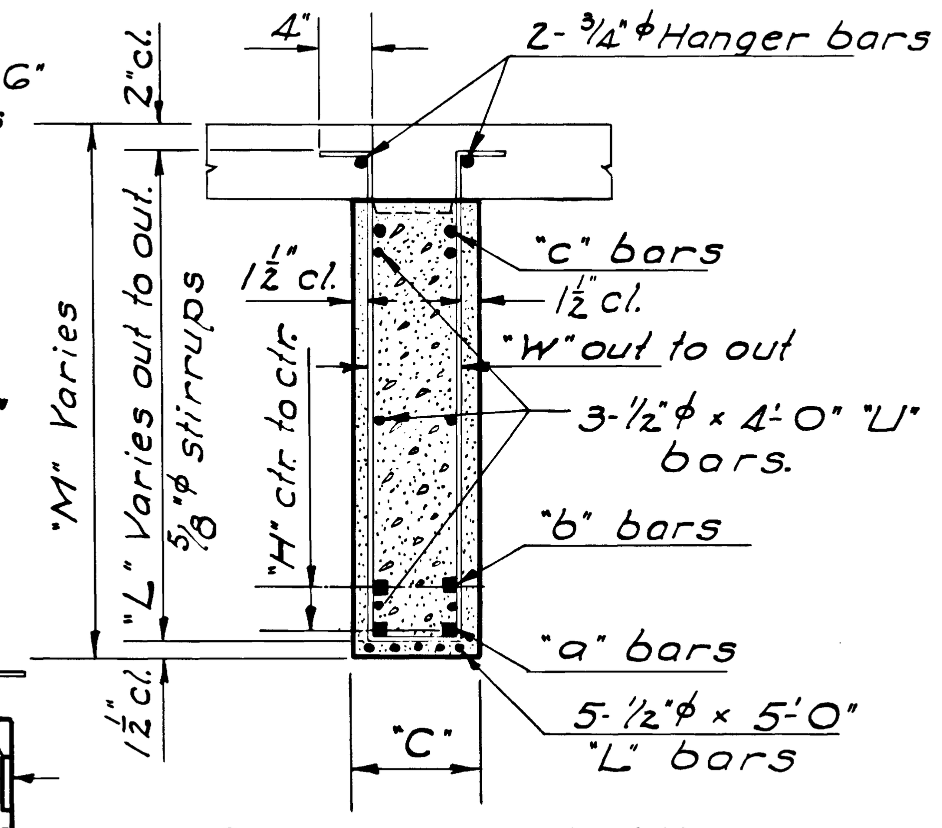

SECTION "X-X"

	DIMENSIONS												LONGITUDINAL STEEL			STIRRUP SPACING								STIRRUP		DECK & BEAM	QUANITY PER BM.		WGT OF BM
24' ROADWAY	A	B	C	D	E	F	G	H	I	J	K	BEAM SPACING	a	b	c	d	e	f	g	h	i	j	k	L-VARIES O.-O.	W	M-VARIES O.-O.	STEEL	CONCRETE	TONS
SPAN LENGTH 20'	19'-11"	24"	9"	3'-0"	11½"	6	3'-0"	3"	1⅝"×6"×5"	4"	4¾"	6 at 5'-3"	2-1⅛"□×19'-0"	2-1"□×18'-0"	2-¾"φ×19'-6"	5	8"	–	–	–	–	13	11½"	2'-2½" To 2'-5½"	6"	2'-6" To 2'-9"	550.5#	1.106 Cu.Yds	2.25
" " 22'	21'-11"	24"	9"	3'-6"	14½"	6	3'-3"	3"	1⅝"×6"×5"	4"	3½"	6 at 5'-3"	2-1¼"□×21'-0"	2-1"□×20'-0"	2-¾"φ×21'-6"	7	8"	–	–	–	–	12	12"	2'-2½" To 2'-5½"	6"	2'-6" To 2'-9"	647.9#	1.223 " "	2.48
" " 25'	24'-11"	24"	9"	4'-0"	13"	7	3'-3"	3¾"	1⅝"×6"×5"	4"	3½"	6 at 5'-3"	2-1¼"□×24'-0"	2-1¼"□×23'-0"	2-⅞"φ×24'-6"	5	6"	7	8"	–	–	10	12"	2'-2½" To 2'-5½"	6"	2'-6" To 2'-9"	872.4#	1.384 " "	2.82
" " 28'	27'-11"	30"	10"	5'-0"	15½"	8	3'-2"	3"	1⅝"×6"×6"	6"	6¼"	6 at 5'-3"	2-1½"□×27'-0"	2-1"□×26'-0"	2-⅞"φ×27'-6"	4	10"	–	–	3	12"	11	15½"	2'-8½" To 2'-11½"	7"	3'-0" To 3'-3"	996.8#	2.150 " "	4.36
" " 30'	29'-11"	30"	10"	6'-0"	13"	9	3'-1"	3¾"	1⅝"×6"×6"	6"	5¼"	6 at 5'-3"	2-1½"□×29'-0"	2-1¼"□×28'-0"	2-1"φ×29'-6"	3	8"	4	10"	3	12"	9	16½"	2'-8½" To 2'-11½"	7"	3'-0" To 3'-3"	1182.4#	2.305 " "	4.70
26' ROADWAY																													
SPAN LENGTH 20'	19'-11"	24"	9"	3'-0"	11½"	6	3'-0"	3½"	1⅝"×6"×5"	4"	5½"	6 at 5'-7"	2-1⅛"□×19'-0"	2-1⅛"□×18'-0"	2-¾"φ×19'-6"	3	6"	6	8"	–	–	8	12"	2'-2½" To 2'-5⅞"	6"	2'-6" To 2'-9¼"	603.1#	1.106 Cu.Yds	2.25
" " 22'	21'-11"	24"	9"	3'-6"	14½"	6	3'-3"	3½"	1⅝"×6"×5"	4"	3½"	6 at 5'-7"	2-1¼"□×21'-0"	2-1⅛"□×20'-0"	2-¾"φ×21'-6"	4	6"	7	8"	–	–	8	12"	2'-2½" To 2'-5⅞"	6"	2'-6" To 2'-9¼"	710.6#	1.223 " "	2.50
" " 25'	24'-11"	24"	10"	4'-0"	13"	7	3'-3"	3½"	1⅝"×6"×6"	4"	5¼"	6 at 5'-7"	2-1½"□×24'-0"	2-1⅛"□×23'-0"	2-⅞"φ×24'-6"	4	6"	8	8"	–		9	12½"	2'-2½" To 2'-5⅞"	7"	2'-6" To 2'-9¼"	938.0#	1.541 " "	3.14
" " 28'	27'-11"	30"	10"	5'-0"	15½"	8	3'-2"	3½"	1⅝"×6"×6"	6"	5½"	6 at 5'-7"	2-1½"□×27'-0"	2-1⅛"□×26'-0"	2-⅞"φ×27'-6"	3	8"	3	10"	4	12"	8	15"	2'-8½" To 2'-11⅞"	7"	3'-0" To 3'-3¼"	1072.3#	2.150 " "	4.36
" " 30'	29'-11"	30"	10"	6'-0"	13"	9	3'-1"	3¾"	1⅝"×6"×6"	6"	6"	6 at 5'-7"	2-1½"□×29'-0"	2-1¼"□×28'-0"	2-1"φ×29'-6"	5	8"	3	10"	3	12"	9	15"	2'-8½" To 2'-11⅞"	7"	3'-0" To 3'-3¼"	1321.9#	2.305 " "	4.70
30' ROADWAY																													
SPAN LENGTH 20'	19'-11"	24"	9"	3'-0"	11½"	6	3'-0"	3"	1⅝"×6"×5"	4"	4¾"	7 at 5'-4"	2-1⅛"□×19'-0"	2-1"□×18'-0"	2-¾"φ×19'-6"	5	8"	–	–	–	–	13	11½"	2'-2½" To 2'-6¼"	6"	2'-6" To 2'-9¾"	550.5#	1.106 Cu.Yds	2.25
" " 22'	21'-11"	24"	9"	3'-6"	14½"	6	3'-3"	3"	1⅝"×6"×5"	4"	3½"	7 at 5'-4"	2-1¼"□×21'-0"	2-1"□×20'-0"	2-¾"φ×21'-6"	7	8"	–	–	–	–	12	12"	2'-2½" To 2'-6¼"	6"	2'-6" To 2'-9¾"	647.9#	1.223 " "	2.50
" " 25'	24'-11"	24"	9"	4'-0"	13"	7	3'-3"	3¾"	1⅝"×6"×5"	4"	3½"	7 at 5'-4"	2-1¼"□×24'-0"	2-1¼"□×23'-0"	2-⅞"φ×24'-6"	5	6"	7	8"	–	–	10	12"	2'-2½" To 2'-6¼"	6"	2'-6" To 2'-9¾"	872.4#	1.384 " "	2.82
" " 28'	27'-11"	30"	10"	5'-0"	15½"	8	3'-2"	3"	1⅝"×6"×6"	6"	6¼"	7 at 5'-4"	2-1½"□×27'-0"	2-1"□×26'-0"	2-⅞"φ×27'-6"	4	10"	–	–	3	12"	11	15½"	2'-8½" To 3'-0¼"	7"	3'-0" To 3'-3¾"	949.8#	2.150 " "	4.36
" " 30'	29'-11"	30"	10"	6'-0"	13"	9	3'-1"	3¾"	1⅝"×6"×6"	6"	5¼"	7 at 5'-4"	2-1½"□×29'-0"	2-1¼"□×28'-0"	2-1"φ×29'-6"	3	8"	4	10"	3	12"	9	16½"	2'-8½" To 3'-0¼"	7"	3'-0" To 3'-3¾"	1182.4#	2.305 " "	4.70
32' ROADWAY																													
SPAN LENGTH 20'	19'-11"	24"	9"	3'-0"	11½"	6	3'-0"	3"	1⅝"×6"×5"	4"	3½"	7 at 5'-8"	2-1¼"□×19'-0"	2-1"□×18'-0"	2-¾"φ×19'-6"	7	8"	–	–	–	–	10	12"	2'-2½" To 2'-6⅝"	6"	2'-6" To 2'-10⅛"	601.9#	1.106 Cu.Yds	2.25
" " 22'	21'-11"	24"	9"	3'-6"	14½"	6	3'-3"	3½"	1⅝"×6"×5"	4"	3½"	7 at 5'-8"	2-1¼"□×21'-0"	2-1⅛"□×20'-0"	2-¾"φ×21'-6"	8	6"	4	8"	–	–	8	12"	2'-2½" To 2'-6⅝"	6"	2'-6" To 2'-10⅛"	729.3#	1.223 " "	2.50
" " 25'	24'-11"	24"	10"	4'-0"	13"	7	3'-3"	3½	1⅝"×6"×6"	4"	5½"	7 at 5'-8"	2-1½"□×24'-0"	2-1⅛"□×23'-0"	2-⅞"φ×24'-6"	6	6"	6	8"	–	–	10	12"	2'-2½" To 2'-6⅝"	7"	2'-6" To 2'-10⅛"	958.0#	1.541 " "	3.14
" " 28'	27'-11"	30"	10"	5'-0"	15½"	8	3'-2"	3½"	1⅝"×6"×6"	6"	3¾"	7 at 5'-8"	2-1½"□×27'-0"	2-1⅛"□×26'-0"	2-⅞"φ×27'-6"	2	8"	3	10"	4	12"	9	15½"	2'-8½" To 3'-0⅝"	7"	3'-0" To 3'-4⅛"	1028.3#	2.150 " "	4.36
" " 30'	29'-11"	30"	10"	6'-0"	13"	9	3'-1"	3¾"	1⅝"×6"×6"	6"	4"	7 at 5'-8"	2-1½"□×29'-0"	2-1¼"□×28'-0"	2-1"φ×29'-6"	4	8"	4	10"	3	12"	9	15"	2'-8½" To 3'-0⅝"	7"	3'-0" To 3'-4⅛"	1192.3#	2.305 " "	4.70
36' ROADWAY																													
SPAN LENGTH 20'	19'-11"	24"	9"	3'-0"	11½"	6	3'-0"	3"	1⅝"×6"×5"	4"	4¾"	8 at 5'-5"	2-1⅛"□×19'-0"	2-1"□×18'-0"	2-¾"φ×19'-6"	5	8"	–	–	–	–	13	11½"	2'-2½" To 2'-6¼"	6"	2'-6" To 2'-9¾"	550.5#	1.106 Cu.Yds	2.25
" " 22'	21'-11"	24"	9"	3'-6"	14½"	6	3'-3"	3"	1⅝"×6"×5"	4"	3½"	8 at 5'-5"	2-1¼"□×21'-0"	2-1"□×20'-0"	2-¾"φ×21'-6"	7	8"	–	–	–	–	12	12"	2'-2½" To 2'-6¼"	6"	2'-6" To 2'-9¾"	647.9#	1.223 " "	2.48
" " 25'	24'-11"	24"	9"	4'-0"	13"	7	3'-3"	3¾"	1⅝"×6"×5"	4"	3½"	8 at 5'-5"	2-1¼"□×24'-0"	2-1¼"□×23'-0"	2-⅞"φ×24'-6"	5	6"	7	8"	–	–	10	12"	2'-2½" To 2'-6¼"	6"	2'-6" To 2'-9¾"	872.4#	1.384 " "	2.82
" " 28'	27'-11"	30"	10"	5'-0"	15½"	8	3'-2"	3"	1⅝"×6"×6"	6"	6¼"	8 at 5'-5"	2-1½"□×27'-0"	2-1"□×26'-0"	2-⅞"φ×27'-6"	4	10"	–	–	3	12"	11	15½"	2'-8½" To 3'-0¼"	7"	3'-0" To 3'-3¾"	949.8#	2.150 " "	4.36
" " 30'	29'-11"	30"	10"	6'-0"	13"	9	3'-1"	3¾"	1⅝"×6"×6"	6"	5¼"	8 at 5'-5"	2-1½"□×29'-0"	2-1¼"□×28'-0"	2-1"φ×29'-6"	3	8"	4	10"	3	12"	9	16½"	2'-8½" To 3'-0¼"	7"	3'-0" To 3'-3¾"	1182.4#	2.305 " "	4.70
40' ROADWAY																													
SPAN LENGTH 20'	19'-11"	24"	9"	3'-0"	11½"	6	3'-0"	3"	1⅝"×6"×5"	4"	4¾"	9 at 5'-3"	2-1⅛"□×19'-0"	2-1"□×18'-0"	2-¾"φ×19'-6"	5	8"	–	–	–	–	13	11½"	2'-2½" To 2'-7½"	6"	2'-6" To 2'-11"	550.5#	1.106 Cu.Yds	2.25
" " 22'	21'-11	24"	9"	3'-6"	14½"	6	3'-3"	3"	1⅝"×6"×5"	4"	3½"	9 at 5'-3"	2-1¼"□×21'-0"	2-1"□×20'-0"	2-¾"φ×21'-6"	7	8"	–	–	–	–	12	12"	2'-2½" To 2'-7½"	6"	2'-6" To 2'-11"	647.9#	1.223 " "	2.48
" " 25'	24'-11"	24"	9"	4'-0"	13"	7	3'-3"	3¾"	1⅝"×6"×5"	4"	3½"	9 at 5'-3"	2-1¼"□×24'-0"	2-1¼"□×23'-0"	2-⅞"φ×24'-6"	5	6"	7	8"	–	–	10	12"	2'-2½" To 2'-7½"	6"	2'-6" To 2'-11"	872.4#	1.384 " "	2.82
" " 28'	27'-11"	30"	10"	5'-0"	15½"	8	3'-2"	3"	1⅝"×6"×6"	6"	6¼"	9 at 5'-3"	2-1½"□×27'-0"	2-1"□×26'-0"	2-⅞"φ×27'-6"	4	10"	3	12"	–	–	11	15½"	2'-8½" To 3'-1½"	7"	3'-0" To 3'-5"	996.8#	2.150 " "	4.36
" " 30'	29'-11"	30"	10"	6'-0"	13"	9	3'-1"	3¾"	1⅝"×6"×6"	6"	5¼"	9 at 5'-3"	2-1½"□×29'-0"	2-1¼"□×28'-0"	2-1"φ×29'-6"	3	8"	4	10"	3	12"	9	16½"	2'-8½" To 3'-1½"	7"	3'-0" To 3'-5"	1182.4#	2.305 " "	4.70
44' ROADWAY																													
SPAN LENGTH 20'	19'-11"	24"	9"	3'-0"	11½"	6	3'-0"	3"	1⅝"×6"×5"	4"	4¾"	10 at 5'-1"	2-1⅛"□×19'-0"	2-1"□×18'-0"	2-¾"φ×19'-6"	5	8"	–	–	–	–	13	11½"	2'-2½" To 2'-8"	6"	2'-6" To 2'-11½"	554.6#	1.106 Cu.Yds	2.25
" " 22'	21'-11"	24"	9"	3'-6"	14½"	6	3'-3"	3½"	1⅝"×6"×5"	4"	5½"	10 at 5'-1"	2-1⅛"□×21'-0"	2-1⅛"□×20'-0"	2-¾"φ×21'-6"	6	8"	–	–	–	–	13	12"	2'-2½" To 2'-8"	6"	2'-6" To 2'-11½"	640.1#	1.223 " "	2.48
" " 25'	24'-11"	24"	9"	4'-0"	13"	7	3'-3"	3¾"	1⅝"×6"×5"	4"	5½"	10 at 5'-1"	2-1¼"□×24'-0	2-1¼"□×23'-0"	2-⅞"φ×24'-6"	6	8"	–	–	–	–	16	12"	2-2½" To 2'-8"	6"	2'-6" To 2'-11½"	841.0#	1.384 " "	2.82
" " 28'	27'-11"	30"	10"	5'-0"	15½"	8	3'-2"	3"	1⅝"×6"×6"	6"	4¼"	10 at 5'-1"	2-1¼"□×27'-0"	2-1"□×26'-0"	2-⅞"φ×27'-6"	3	10"	–	–	4	12"	11	15½"	2'-8½" To 3'-2"	7"	3'-0" To 3'-5½"	829.4#	2.150 " "	4.36
" " 30'	29'-11"	30"	10"	6'-0"	13"	9	3'-1"	3¾"	1⅝"×6"×6"	6"	4¼"	10 at 5'-1"	2-1½"□×29'-0"	2-1¼"□×28'-0"	2-1"φ×29'-6"	3	8"	3	10"	3	12"	11	15½"	2'-8½" To 3'-2"	7"	3'-0" To 3'-5½"	1204.1#	2.305 " "	4.70

GENERAL NOTES:
When ever beams are stacked in pile lots extreme care should be taken to place blocking the same distance in from ends of beam and never exceed the "D" dimension.
Beams designed for H20-S16-44 loading.
All concrete shall be class "A" and attain a breaking strength of 3,300 p.s.i. in 28 days (f'c = 1320 p.s.i.).
All reinforcing steel shall be intermediate grade deformed bars (fs = 20,000 p.s.i.). Bars No. 3 to No. 11 inclusive shall conform to A.S.T.M. specifications A 305-50T.
All material and workmanship shall conform to the specifications of the OREGON STATE HIGHWAY COMMISSION.

DATE	REVISION

APPROVED: P.M. [signature]
BRIDGE ENGINEER
DESIGNED F.G. / CHECKED ______
DRAWN F.G. CALC. BOOK 389

OREGON STATE HIGHWAY DEPARTMENT
BRIDGE DIVISION

ST'D PRECAST BEAMS
24',26',30',32',36',40',44'-RDWYS
20'-22'-25'-28' & 30' SPANS

DATE APRIL 27, 1956 SHEET 1 OF 3
BRIDGE NO. ______ DRAWING NO. 12761

B. CO., NO. 375-9-55 12655

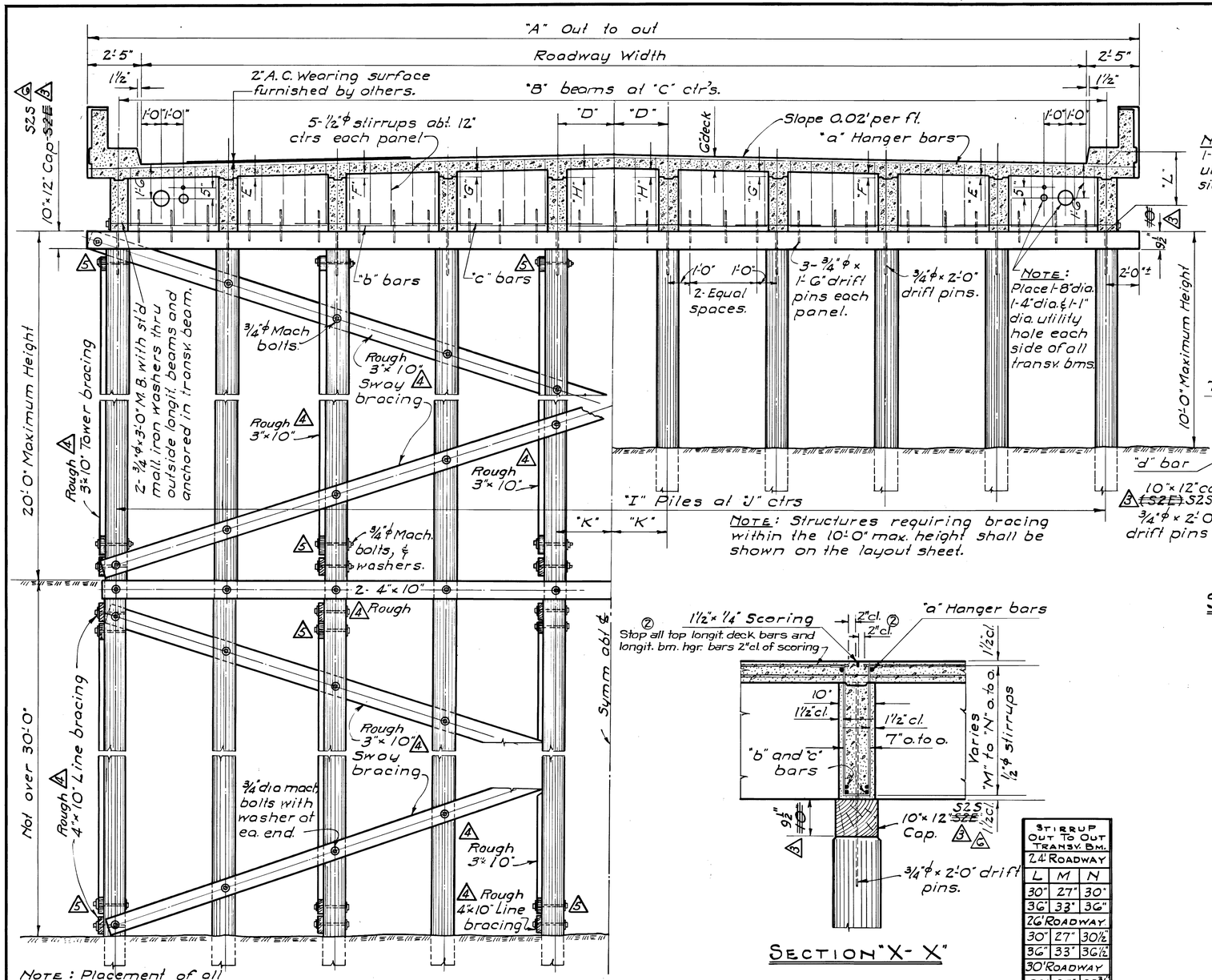

Note: Placement of all bracing shall be shown on layout sheet.

Typical Transverse Section - Interior Bents

Roadway Width	A	B	C	D	E	F	G	H	I	J	K	a-bars	b-bars	c-bars	d-bars
24'	28'-10"	6	5'-3"	2'-7½"	1'-4"	2'-2"	—	—	6	5'-3"	2'-7½"	2-¾"φ×28'-0"	2-¾"φ × 4'-0"	2-¾"φ × 4'-0"	1-¾"φ×28'-6"
26'	30'-10"	6	5'-7"	2'-9½"	1⅜"	2¾"	—	—	6	5'-7"	2'-9½"	2-¾"φ×30'-0	2-¾"φ × 4'-4"	2-¾"φ × 4'-0"	1-¾"φ × 30'-6"
30'	34'-10"	7	5'-4"	2'-8"	1¼"	2½"	3¾"	—	7	5'-4"	2'-8"	2-¾"φ×34'-0"	2-¾"φ × 4'-1"	2-¾"φ × 4'-0"	1-¾"φ × 34'-6"
32'	36'-10"	7	5'-8"	2'-10"	1⅜"	2¾"	4⅛"	—	7	5'-8"	2'-10"	2-¾"φ×36'-0"	2-¾"φ × 4'-5"	2-¾"φ × 4'-0"	1-¾"φ × 36'-6"
36'	40'-10"	8	5'-5"	2'-8½"	1¼"	2½"	3¾"	—	8	5'-5"	2'-8½"	2-¾"φ×40'-0"	2-¾"φ × 4'-2"	2-¾"φ × 4'-0"	1-¾"φ × 40'-6"
40'	44'-10"	9	5'-3"	2'-7½"	1¼"	2½"	3¾"	5"	9	5'-3"	2'-7½"	2-¾"φ×44'-0"	2-¾"φ × 4'-0"	2-¾"φ × 4'-0"	1-¾"φ × 44'-6"
44'	48'-10"	10	5'-1"	2'-6½"	1⅞"	2¼"	3⅜"	4½"	10	5'-1"	2'-6½"	2-¾"φ×48'-0"	2-¾"φ × 3'-10"	2-¾"φ × 4'-0"	1-¾"φ × 48'-6"

Section "X-X"

Stirrup Out to Out Transv. Bm.		
24' Roadway		
L	M	N
30"	27"	30"
36"	33"	36"
26' Roadway		
30"	27"	30½"
36"	33"	36½"
30' Roadway		
30"	27"	30¾"
36"	33"	36¾"
32' Roadway		
30"	27"	31⅛"
36"	33"	37⅛"
36' Roadway		
30"	27"	31¼"
36"	33"	37¼"
40' Roadway		
30"	27"	32¼"
36"	33"	38¼"
44' Roadway		
30"	27"	32"
36"	33"	38"

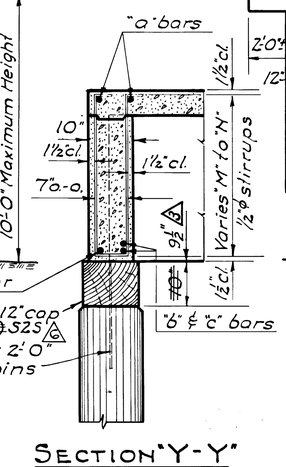

Section "Y-Y"

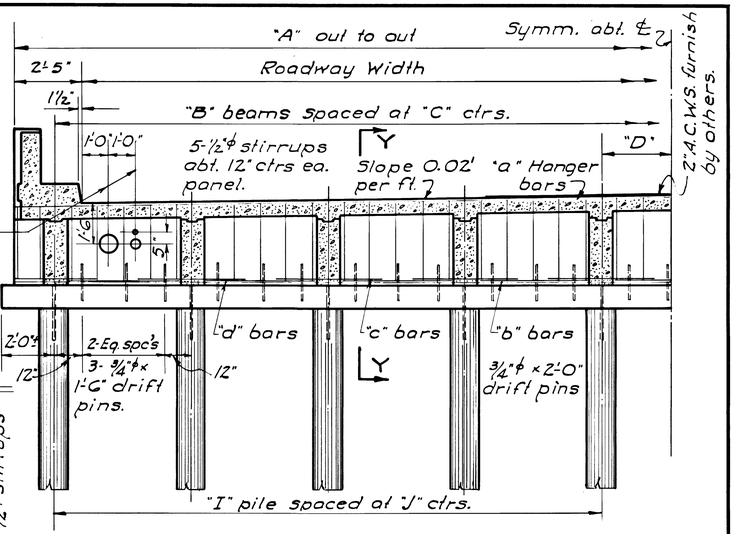

Typical Half Transverse Section End Bents

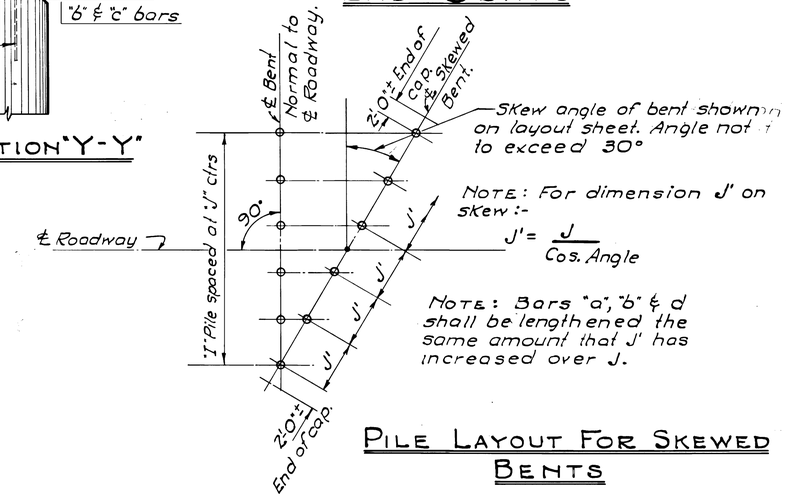

Pile Layout For Skewed Bents

General Notes:
All lumber shall be construction grade. ①
All piling & timber shall be pressure treated.
All bolts to be ¾" dia. machine bolts with square heads & nuts and fitted with standard mall. iron washers and shall be galvanized.

Maximum Pile Load					
Roadway Width	Span Lengths				
	20'	22'	25'	28'	30'
24'	16.6 Tons	18.0 Tons	20.3 Tons	23.0 Tons	24.3 Tons
26'	18.0 "	18.7 "	21.1 "	24.0 "	25.6 "
30'	17.0 "	18.0 "	20.3 "	22.7 "	24.0 "
32'	18.9 "	20.4 "	22.9 "	24.3 "	26.2 "
36'	18.9 "	20.4 "	23.1 "	25.1 "	26.5 "
40'	16.5 "	17.8 "	20.1 "	22.3 "	23.5 "
44'	15.1 "	16.4 "	18.7 "	21.3 "	22.5 "

① Revised Dec. 19, 1956

Date	Revision
	① General Notes
7/12/57	② Sect. "X-X"
8-4-59	③ Pile cap descriptions st.
8-4-59	④ Bracing lumber descrip.
8-4-59	⑤ Indicates double brace
9-7-60	⑥ S2E to S2S on Caps

Approved: R. M. Stephenson, Bridge Engineer
Designed F.G. Checked ___
Drawn F.G. Calc. Book 389

OREGON STATE HIGHWAY DEPARTMENT
BRIDGE DIVISION

STANDARD PRECAST BEAMS

BENT DETAILS

Date APRIL 27, 1956 Sheet 2 of 3
Bridge No. ___ Drawing No. 12762

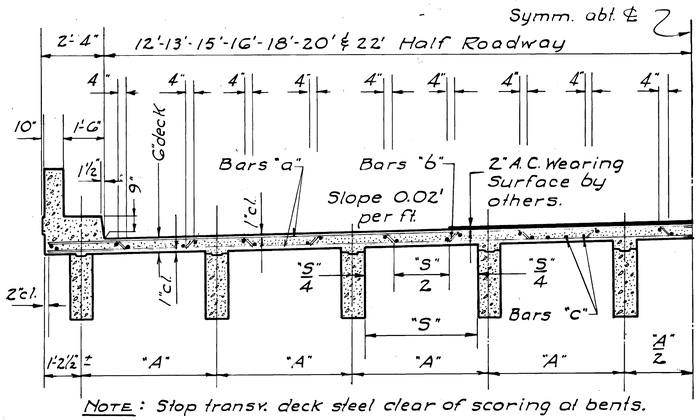

NOTE: Stop transv. deck steel clear of scoring at bents.

TYPICAL HALF DECK SECTION

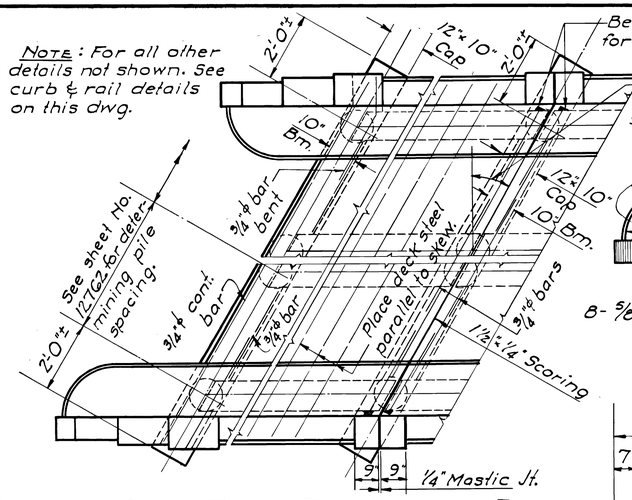

TYPICAL PART PLAN FOR SKEWED BENTS

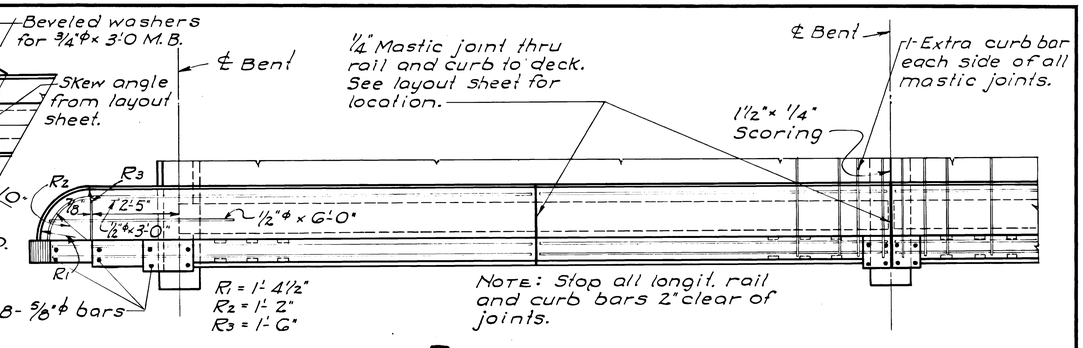

PLAN

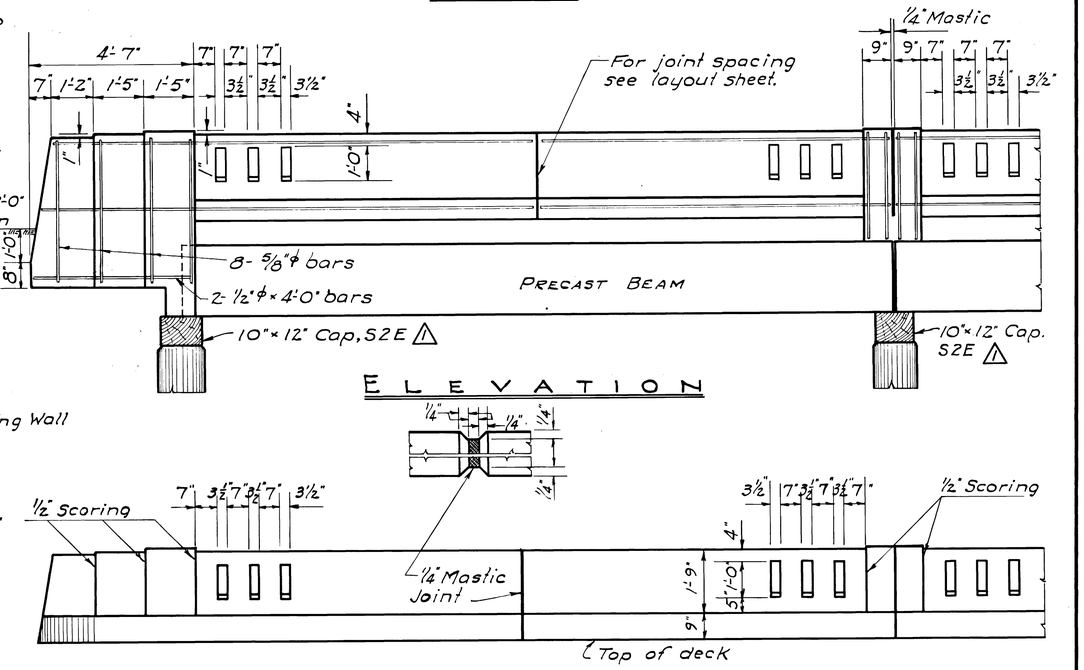

ELEVATION

24' ROADWAY		TRANSVERSE DECK STEEL		LONGIT. SPACER BARS	
SKEW ANGLE	A	"a" BARS STRAIGHT TOP AND BOTTOM	"b"-bars (Bent)	PLACEMENT	No. OF "C" BARS
0° To 15°	5'-3" To 5'-5¼"	⅝"φ bars at 16" ctrs	⅝"φ bars at 16" ctrs		34-½"φ BARS
15° To 30°	5'-5¼" To 6'-0¾"	⅝"φ " " 15" "	⅝"φ " " 15" "		39-½"φ "
26' ROADWAY					
0° To 15°	5'-7" To 5'-9⅜"	⅝"φ bars at 16" ctrs	⅝"φ bars at 16" ctrs		34½"φ Bars
15° To 30°	5'-9⅜" To 6'-5⅜"	⅝"φ " " 15" "	⅝"φ " " 15" "		39-½"φ "
30' ROADWAY					
0° To 15°	5'-4" To 5'-6¼"	⅝"φ bars at 16" ctrs	⅝"φ bars at 16" ctrs		40-½"φ Bars
15° To 30°	5'-6¼" To 6'-1⅞"	⅝"φ " " 15" "	⅝"φ " " 15" "		46½"φ "
32' ROADWAY					
0° To 15°	5'-8" To 5'-10⅜"	⅝"φ bars at 16" ctrs	⅝"φ bars at 16" ctrs		40-½"φ Bars
15° To 30°	5'-10⅜" To 6'-6½"	⅝"φ " " 15" "	⅝"φ " " 15" "		46-½"φ "
36' ROADWAY					
0° To 15°	5'-5" To 5'-7¼"	⅝"φ bars at 16" ctrs	⅝"φ bars at 16" ctrs		46-½"φ Bars
15° To 30°	5'-7¼" To 6'-3"	⅝"φ " " 15" "	⅝"φ " " 15" "		53-½"φ "
40' ROADWAY					
0° To 15°	5'-3" To 5'-5¼"	⅝"φ bars at 16" ctrs	⅝"φ bars at 16" ctrs		52-½"φ Bars
15° To 30°	5'-5¼" To 6'-0¾"	⅝"φ " " 15" "	⅝"φ " " 15" "		60-½"φ "
44' ROADWAY					
0° To 15°	5'-1" To 5'-3⅛"	½"φ bars at 11" ctrs	½"φ bars at 11" ctrs		58-½"φ Bars
15° To 30°	5'-3⅛" To 5'-10⅜"	½"φ " " 10" "	½"φ " " 10" "		58-½"φ Bars

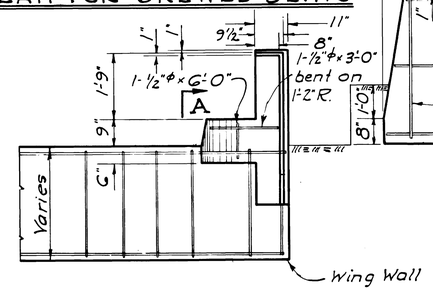

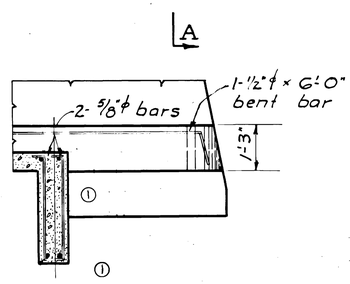

SECTION "A-A"

INSIDE VIEW OF RAIL

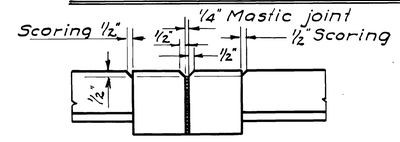

SCORING DETAIL INT. POSTS

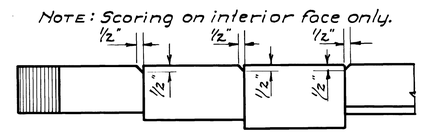

SCORING DETAIL - END POSTS

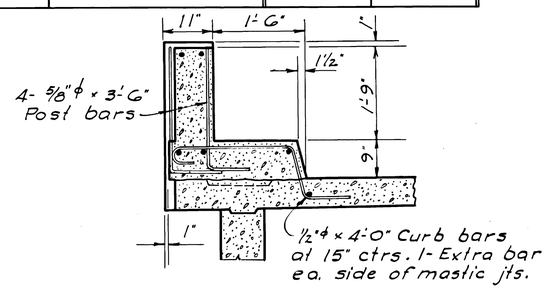

POST SECTION

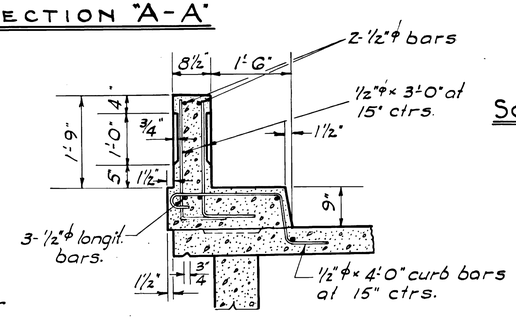

RAIL SECTION

① REVISED DEC. 19, 1956

DATE	REVISION
8-4-59	△1 Pile cap lumber description

APPROVED: L. M. Johnson
BRIDGE ENGINEER
DESIGNED F.G. CHECKED
DRAWN F.G. CALC. BOOK 389

OREGON STATE HIGHWAY DEPARTMENT
BRIDGE DIVISION

STANDARD PRECAST BEAMS

DECK, CURB & RAIL DETAILS

DATE APRIL 27, 1956 SHEET 3 OF 3
BRIDGE NO. DRAWING NO. 12763

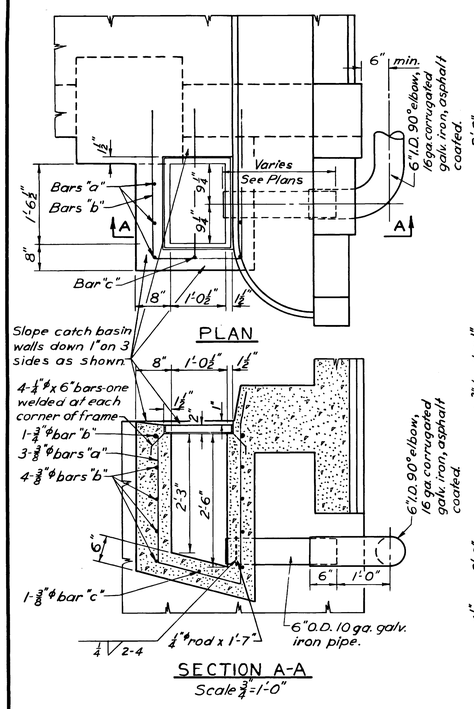

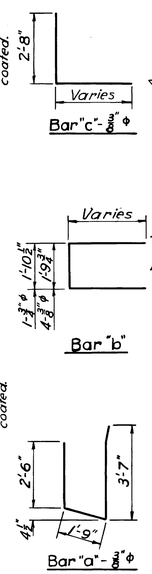

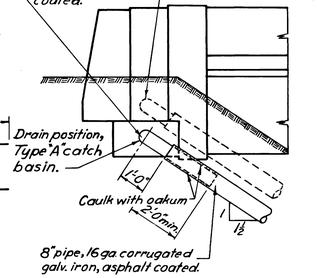

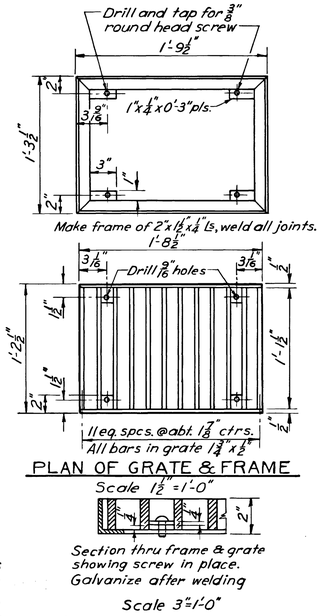

Weight of bars and angles for one catch basin = 71 lbs

Weight of reinforcing steel for 1 Type "A" catch basin = 35 lbs. (approx).

Weight of reinforcing steel for 1 Type "B" catch basin = 25 lbs. (approx).

TYPE A CATCH BASIN

STANDARD CATCH BASIN DETAILS

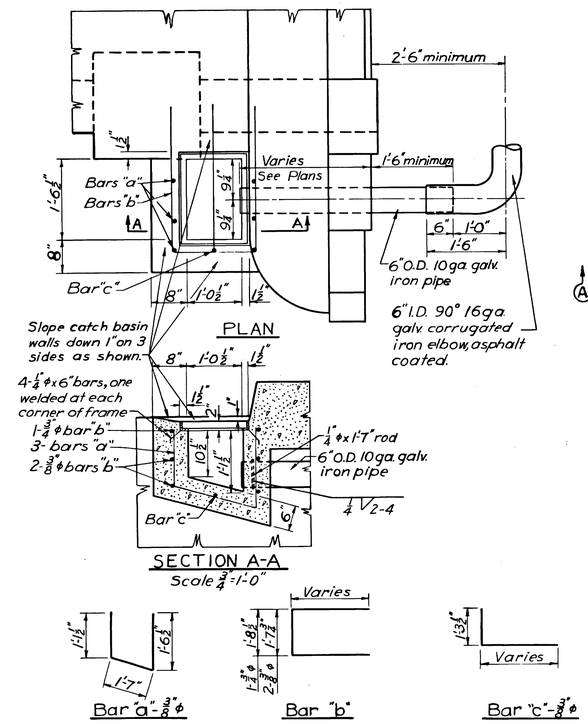

TYPE B CATCH BASIN

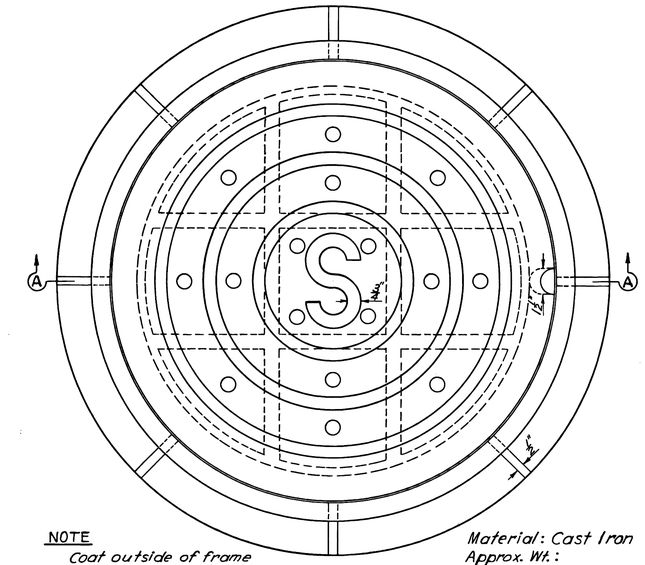

NOTE

Coat outside of frame with asphalt where it comes in contact with concrete.

Material: Cast Iron
Approx. Wt.:
Cover - 139 lbs.
Frame - 237 lbs.

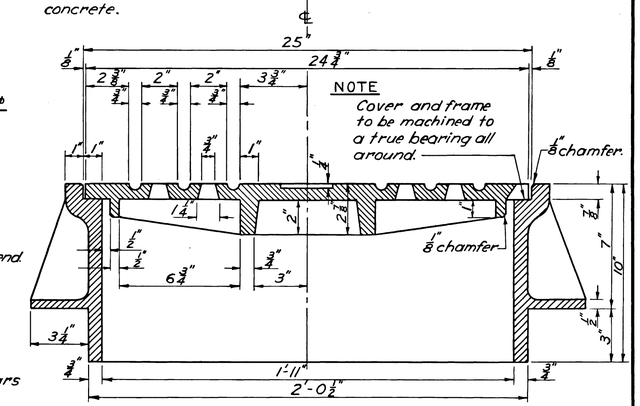

STANDARD MANHOLE COVER AND FRAME

FOR INFORMATION ONLY

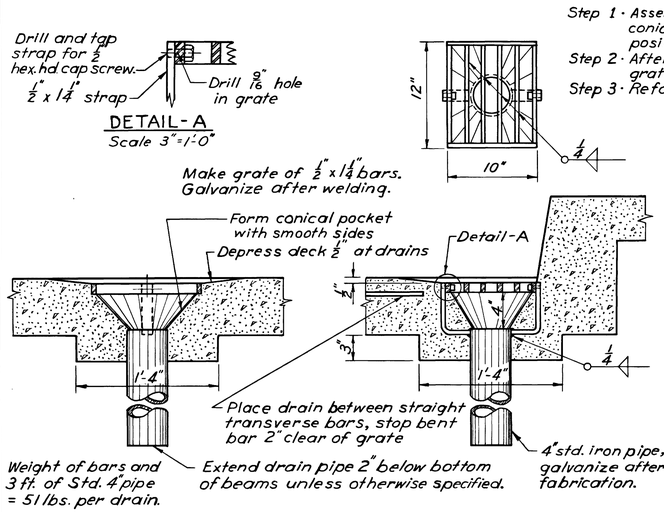

Step 1 · Assemble grate and drain pipe with conical form in place and place in position.

Step 2 · After concrete has set unscrew grate and remove conical form.

Step 3 · Refasten grate.

TYPE A DRAIN

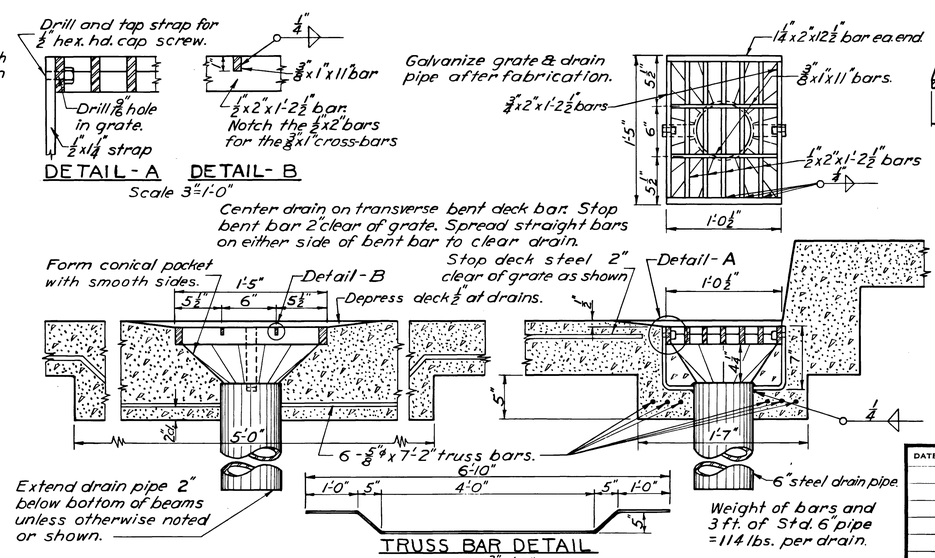

Scale 1 1/2"=1'-0"

TYPE B DRAIN

STANDARD DRAIN DETAILS

DATE	REVISION

APPROVED: Leon D. Murchout
BRIDGE ENGINEER

DESIGNED ____ CHECKED ____
DRAWN J.B.L. CALC. BOOK ____

OREGON STATE HIGHWAY DEPARTMENT
BRIDGE DIVISION

STANDARD
DRAINS
CATCH BASINS
MANHOLE COVER & FRAME
GENERAL DETAILS

DATE 10-29-58 SHEET ____ OF ____
BRIDGE NO. ____ DRAWING NO. 14660

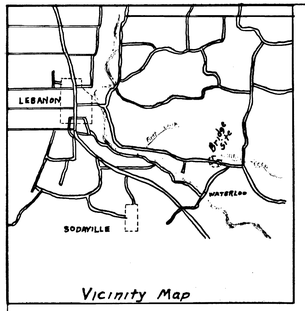

Vicinity Map

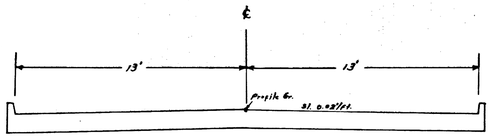

BRIDGE TYPICAL SECTION

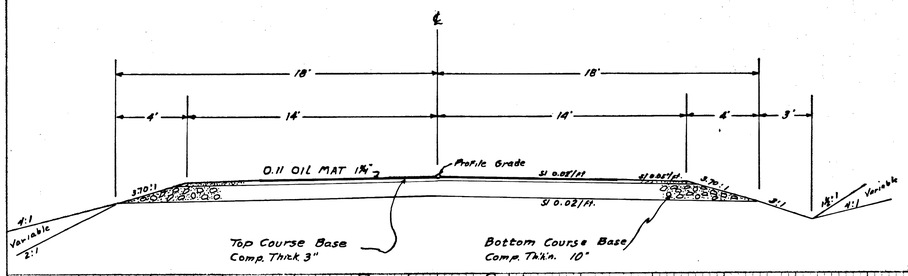

Roadway Section
at Bridge Site

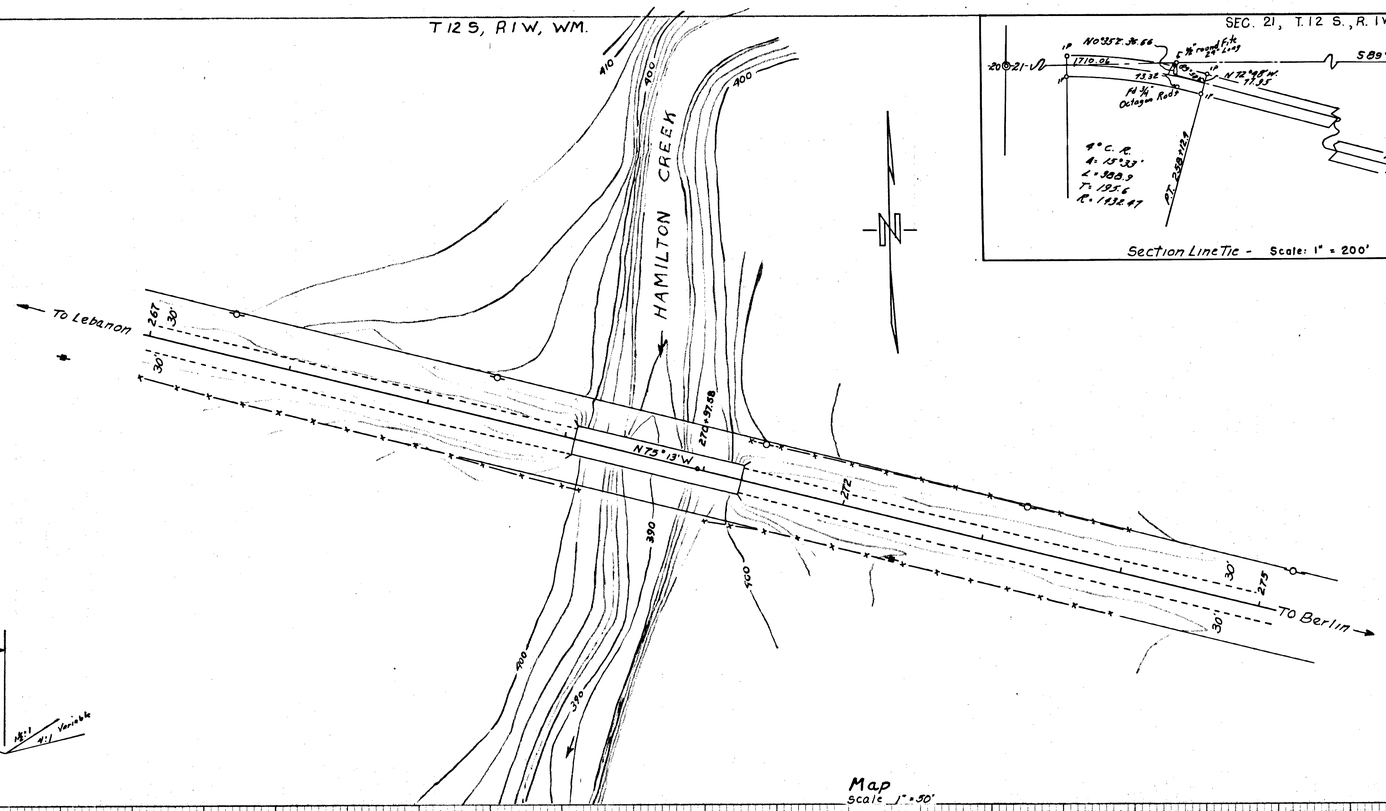

Map
Scale 1" = 50'

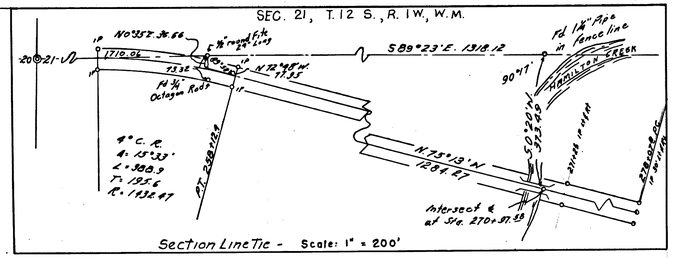

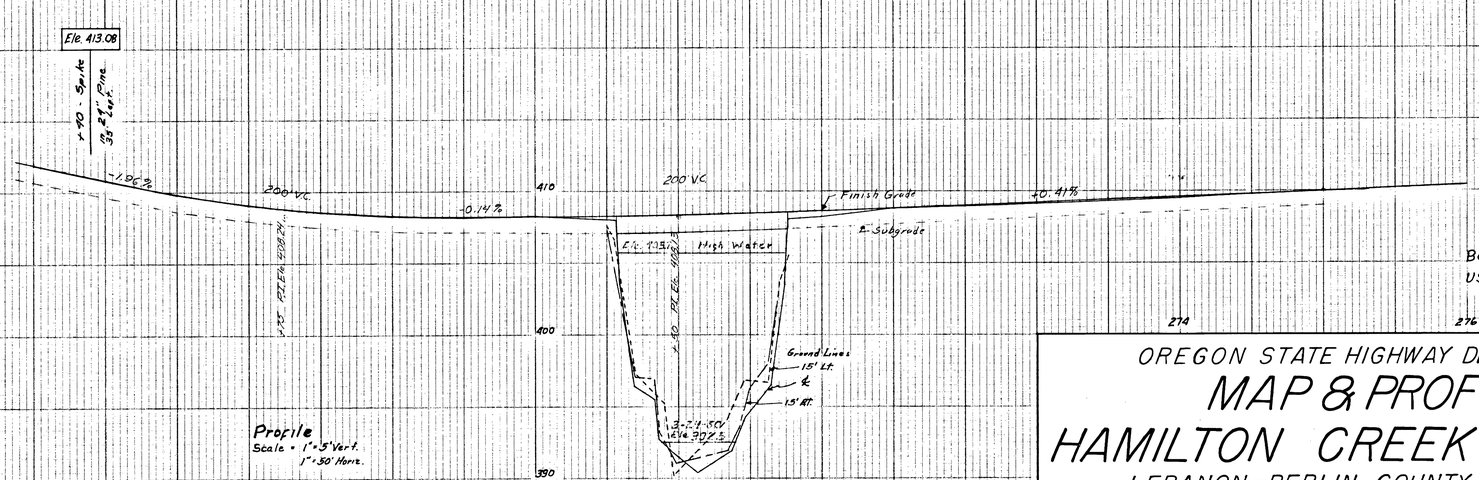

Profile
Scale = 1" = 5' Vert.
1" = 50' Horiz.

Elk. 415.00

USGS M 182
Approx. ½ Mi. East of Proj. at road intersection

Bearings — County Records
USGS Datum 415.00 from quadrangle Map.

OREGON STATE HIGHWAY DEPARTMENT

MAP & PROFILE
HAMILTON CREEK BRIDGE

LEBANON-BERLIN COUNTY ROAD

Br # 11964A — LINN COUNTY — Dwg # 15732

MARCH 1960 — SCALE 1" = 50' — L. L. MACINTYRE, RES. ENG.

FINAL SURVEY — SURVEYED, PLOTTED, TEMPLATE, AREAS, AREAS CHECKED — NOTE BOOK — NO. — BY — DATE

ORIGINAL SURVEY — SURVEYED, PLOTTED, TEMPLATE, AREAS, AREAS CHECKED — NOTE BOOK — NO. — BY — DATE

6-6-60

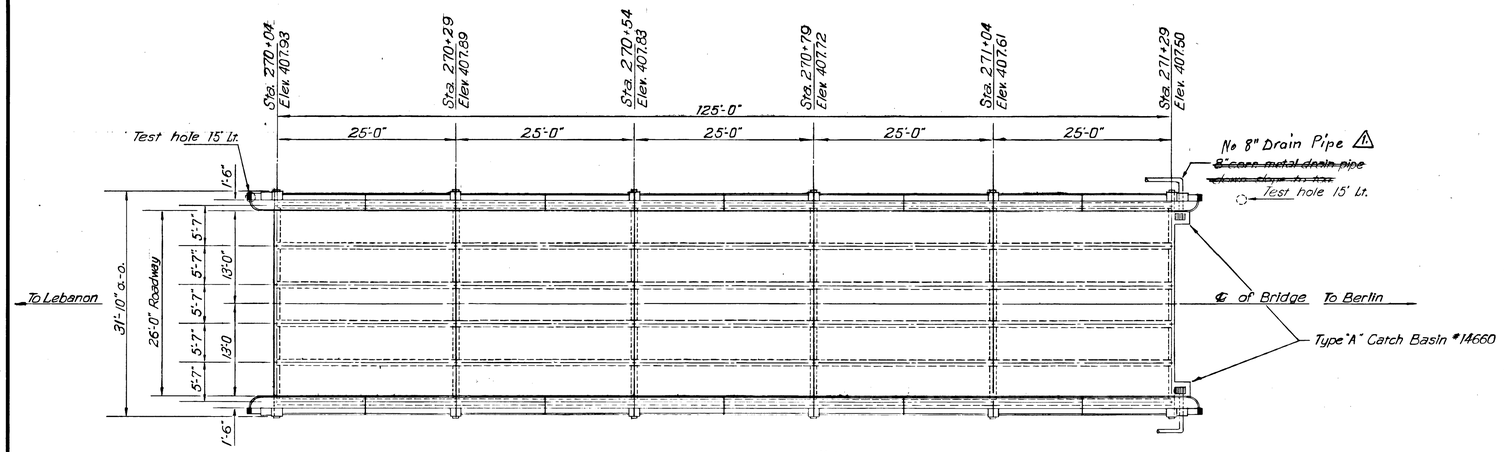

Note:
Elevations shown are finish at top of concrete 13' right & left.

P L A N

SCALE: 1"=10'-0"

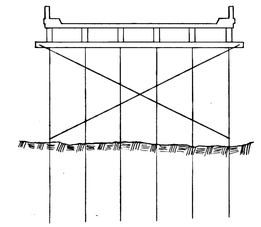

PILE BRACING

BENTS 3&4

NO SCALE

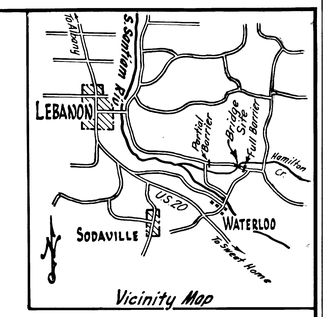

Vicinity Map

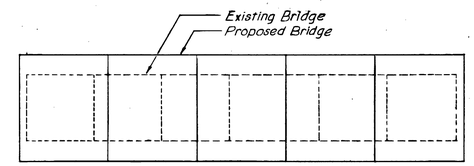

EXISTING & PROPOSED BRIDGE

NO SCALE

General Notes:
Details will be as shown on drawings 12761, 12762, 12763 & 14660 except that there will be no Asphaltic concrete wearing surface. General notes continue on drawing 12761.

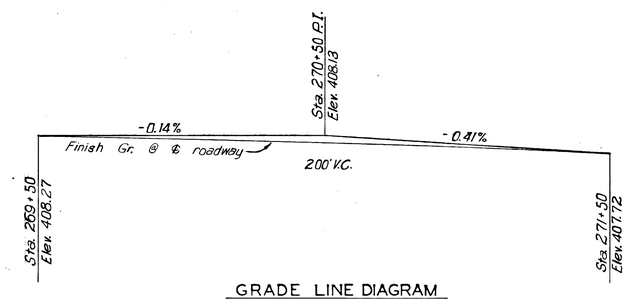

GRADE LINE DIAGRAM

NO SCALE

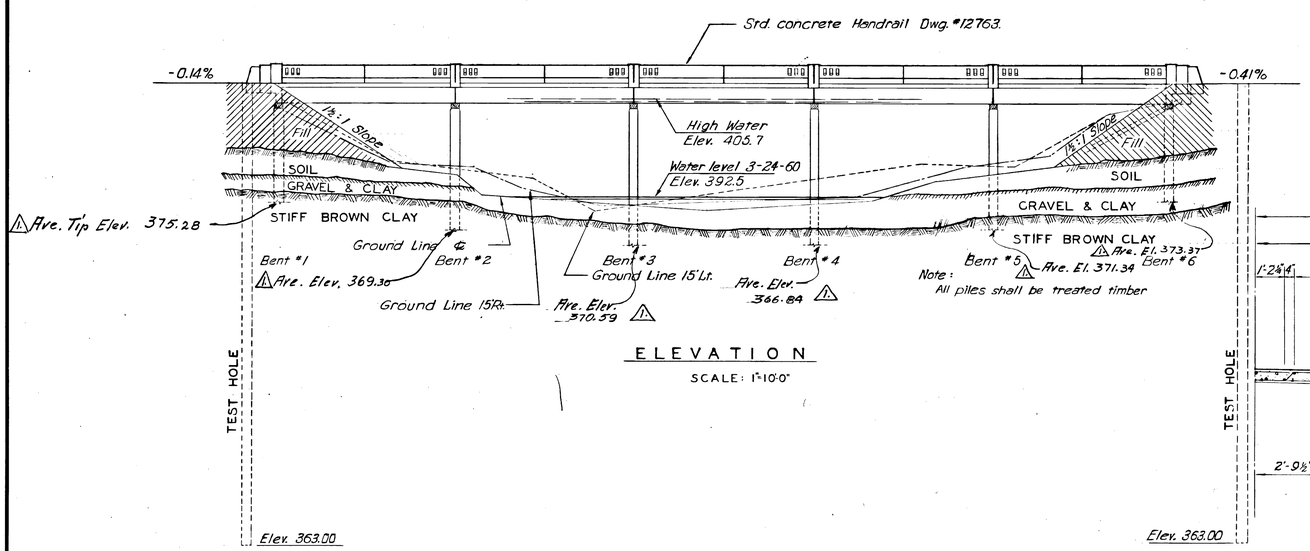

ELEVATION

SCALE: 1"=10'-0"

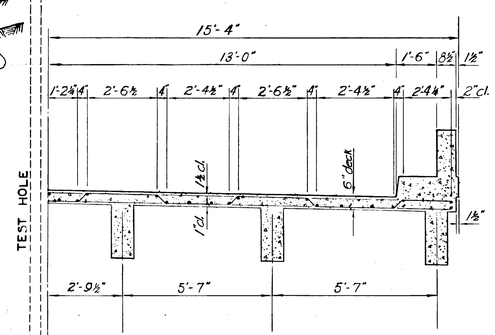

TYPICAL HALF DECK SECTION

SCALE: $\frac{3}{8}$" = 1'-0"

Deck Steel:
#5 straight @ 12" ctrs top & bottom.
#5 bent @ 12" ctrs
39-#4 spacers as shown.

Revised as constructed 2.17.61

APPROVED: Bridge Engineer; Asst. State Highway Engineer; State Highway Engineer	OREGON STATE HIGHWAY DEPARTMENT BRIDGE DIVISION
	HAMILTON CREEK BRIDGE LEBANON-BERLIN ROAD FAS214 LINN COUNTY
	PLAN & ELEVATION
DESIGNED L.H.B. CHECKED DRAWN L.H.B. CALC. BOOK 529	DATE MAY 5, 1960 BRIDGE NO. 1196-4A ACCOMPANIED BY DWGS. 12761, 12762, 12763 & 14660 SHEET 1 OF 4 DRAWING NO. 15880

SWENDER BLUE PRINT CO. NO. 137 DRAFTEX