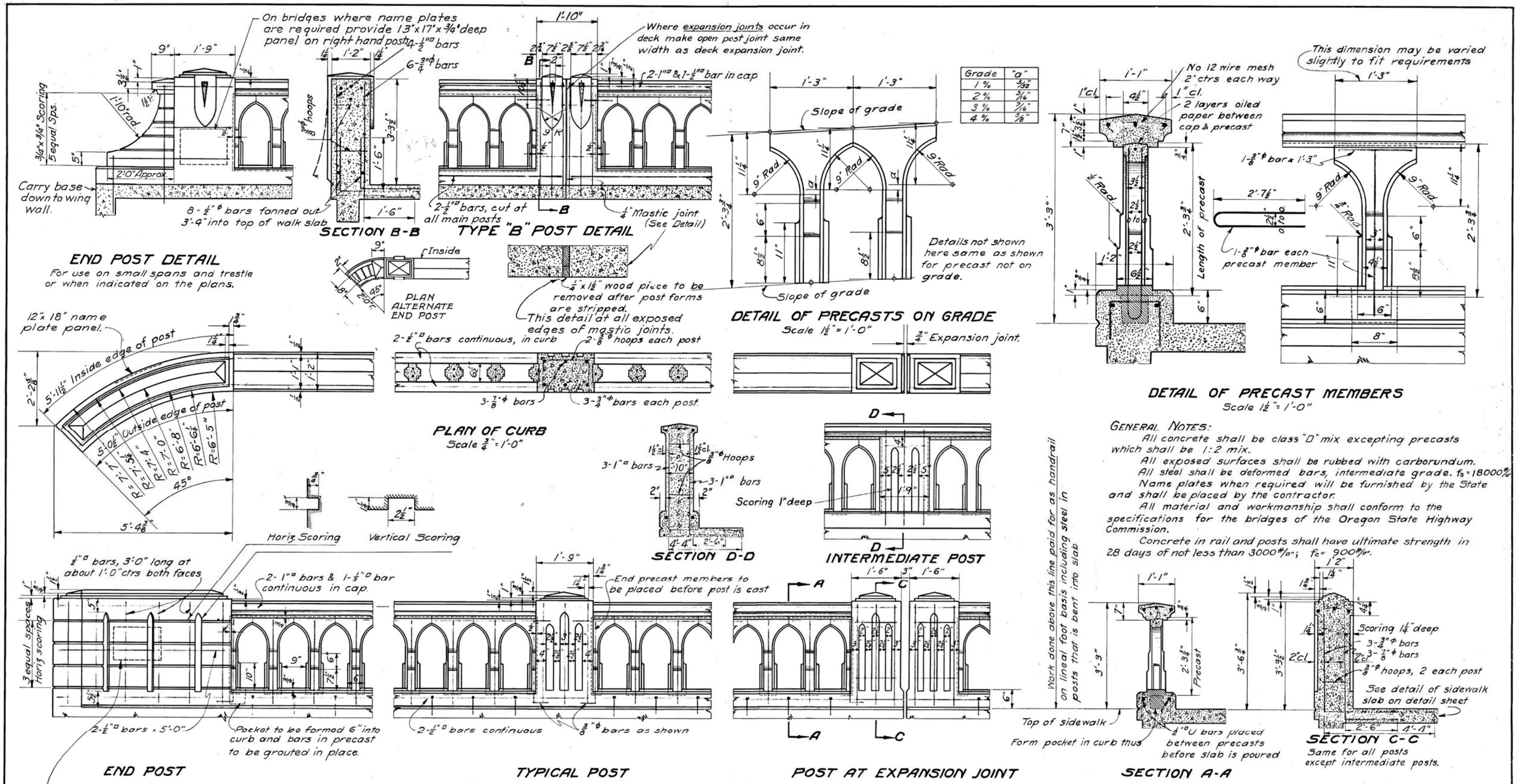

END POST DETAIL
For use on small spans and trestle or when indicated on the plans.

SECTION B-B

TYPE "B" POST DETAIL

DETAIL OF PRECASTS ON GRADE
Scale 1 1/2" = 1'-0"

DETAIL OF PRECAST MEMBERS
Scale 1 1/2" = 1'-0"

PLAN OF CURB
Scale 3/4" = 1'-0"

SECTION D-D

INTERMEDIATE POST

END POST

TYPICAL POST

POST AT EXPANSION JOINT

SECTION A-A

SECTION C-C
Same for all posts except intermediate posts.

GENERAL NOTES:

All concrete shall be class "D" mix excepting precasts which shall be 1:2 mix.

All exposed surfaces shall be rubbed with carborundum.

All steel shall be deformed bars, intermediate grade. $f_s = 18000$ #/□"

Name plates when required will be furnished by the State and shall be placed by the contractor.

All material and workmanship shall conform to the specifications for the bridges of the Oregon State Highway Commission.

Concrete in rail and posts shall have ultimate strength in 28 days of not less than 3000 #/□"; $f_c = 900$ #/□".

On right hand post only omit center scoring and substitute 12"x18" name plate panel 3/4" deep

Note: Maximum Panel Length = 15'-0" c.c. posts.
Railing designed for 650# per lineal foot horizontal force.

FOR INFORMATION ONLY

Revised Nov. 20, 1933
Revised Nov. 16, 1935

Approved:

Bridge Engineer

OREGON
STATE HIGHWAY COMMISSION

STANDARD CONCRETE HANDRAIL

FOR BRIDGES WITH SIDEWALK

SCALE AS NOTED | DRAWN BY L.S.S. | TRACED BY C.H.R.
OCT. 14. 1933. | CHECKED BY | DRAWING NO. 5032.

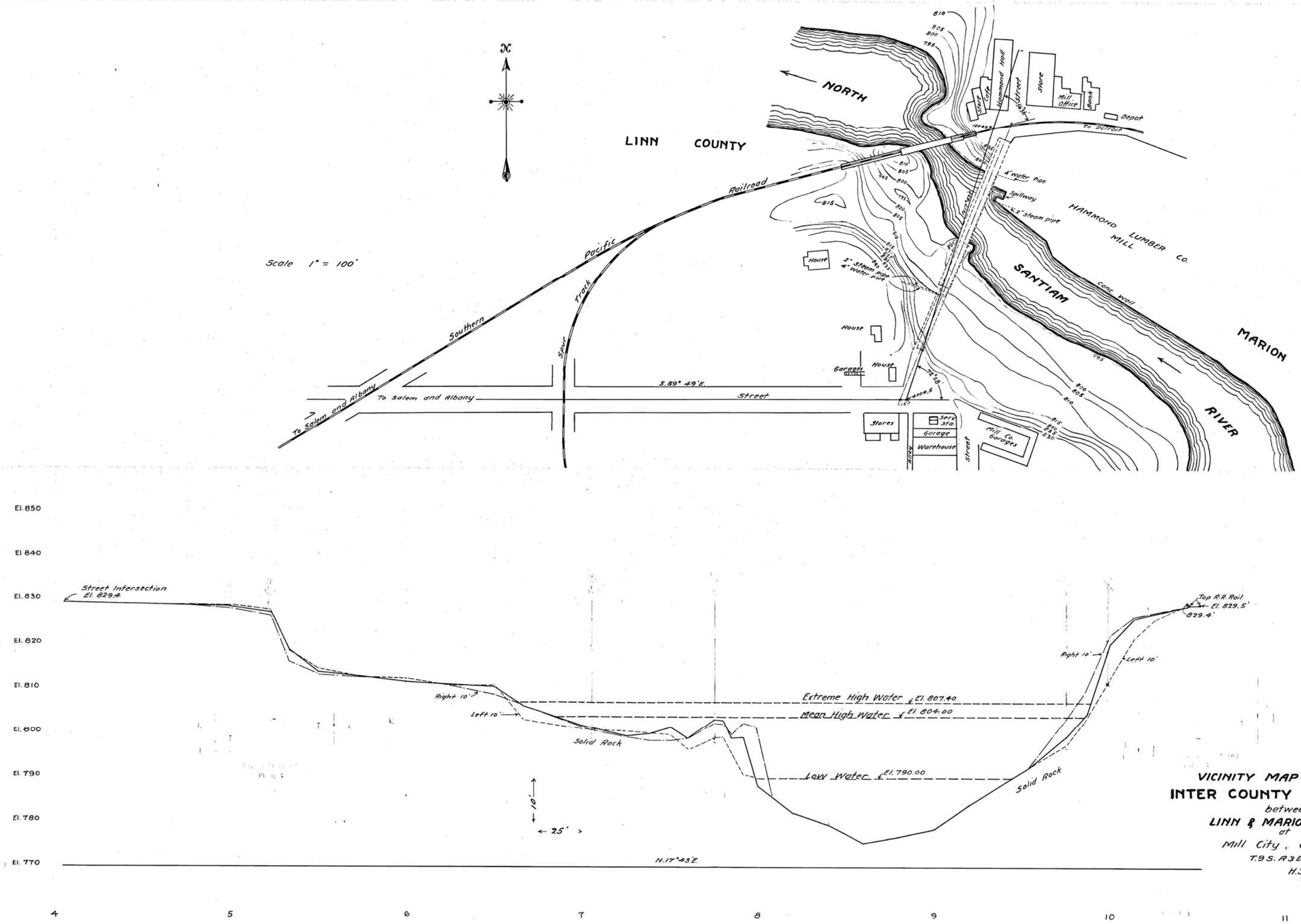

VICINITY MAP & PROFILE
INTER COUNTY BRIDGE SITE.
between
LINN & MARION COUNTY
at
Mill City, Oregon.
T.9 S. R.3 E. W.M.
H.S. Swart
County Engineer.

BRIDGE No. 2055 DWG. No. 5217

GENERAL NOTES:

All workmanship and materials shall conform to the specifications for the bridges of the Oregon State Highway Commission.

All concrete shall be class D. Allowable f_c = 800 #/□".

All reinforcing steel shall be intermediate grade, deformed bars. f_s = 18000 #/□".

All structural steel shall conform to the A.S.T.M. specifications A7-33T.

All rivets to be $\frac{3}{4}$" dia.

All holes in main members to be sub-punched $\frac{11}{16}$", assembled, and reamed to $\frac{13}{16}$".

Max. net section to be maintained in all tension members.

Top chord joints shall be milled and riveted 100% full strength.

Dead load camber · $1\frac{3}{4}$" @ ℄
Grade line " = @ ℄
Total camber = @ ℄

Concrete wearing surface included in roadway slab.

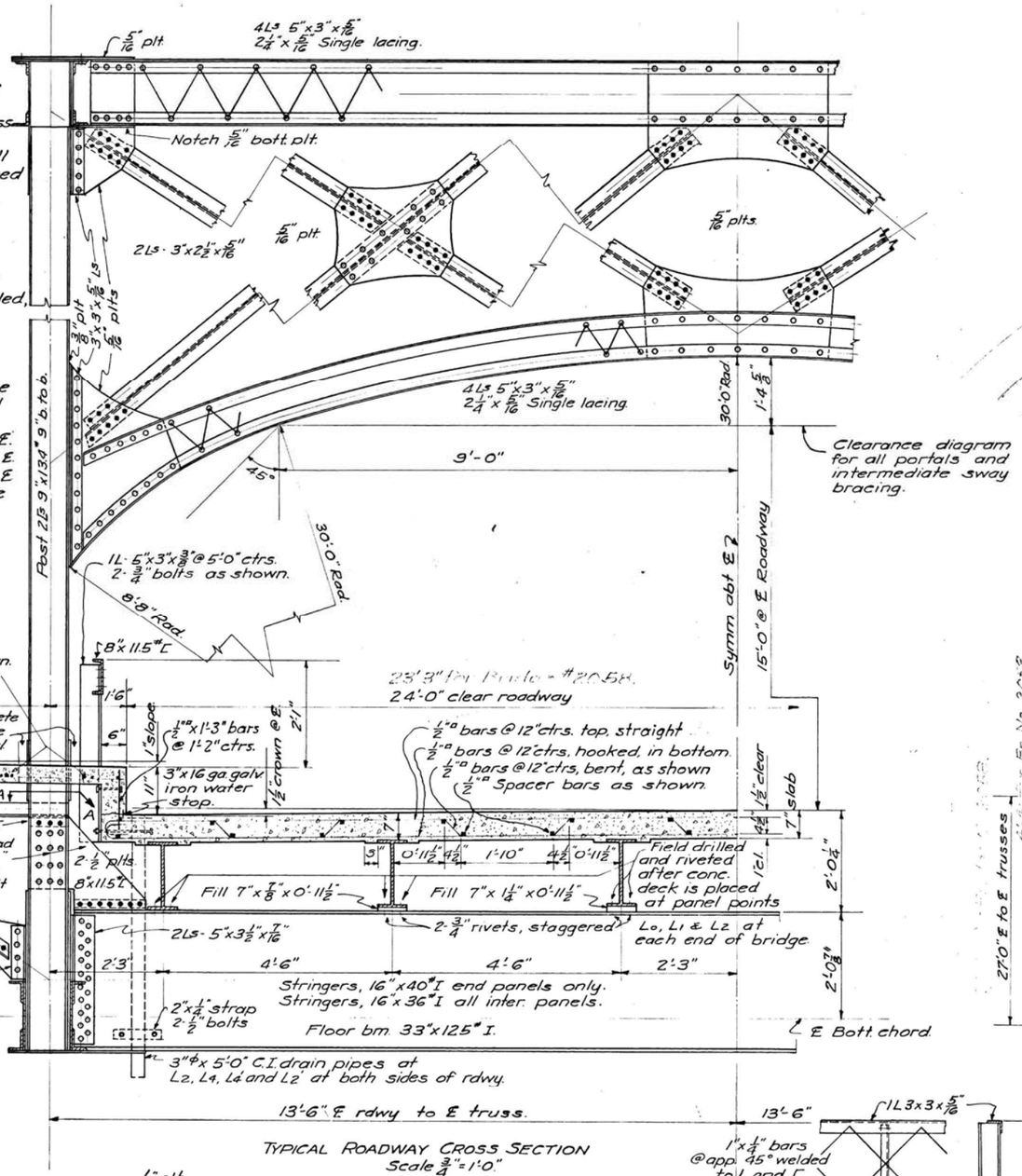

TYPICAL ROADWAY CROSS SECTION
Scale ¾" = 1'-0"

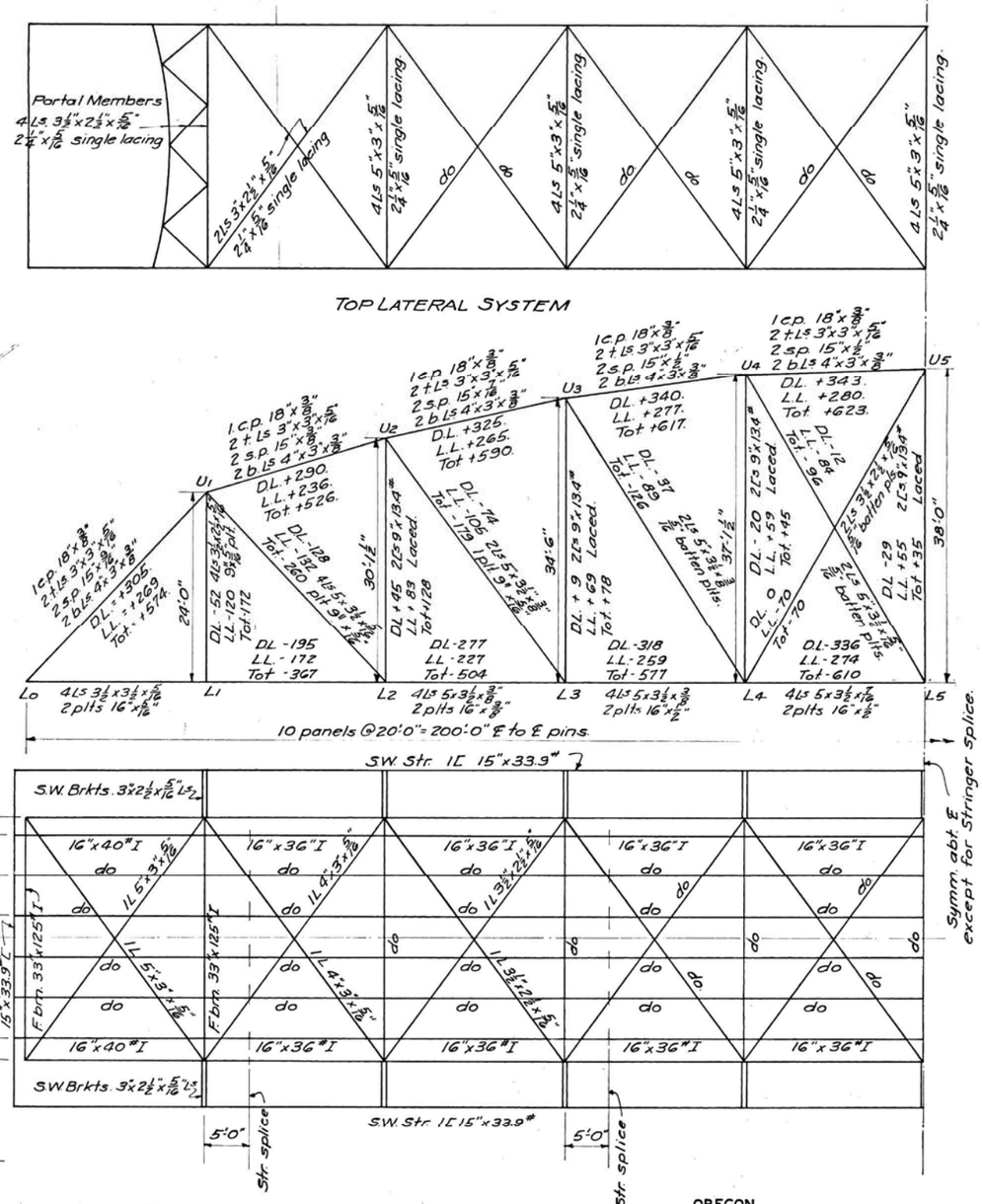

TOP LATERAL SYSTEM

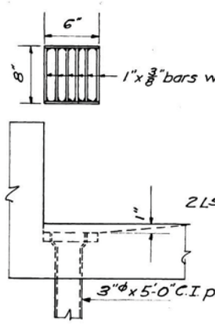

DECK DRAIN

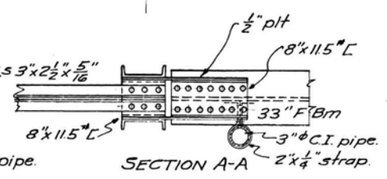

SECTION A-A

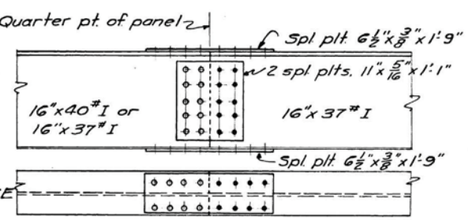

DETAIL OF STRINGER SPLICE

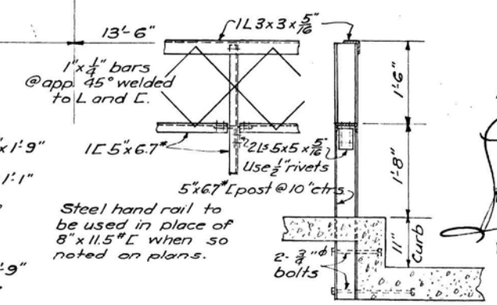

Steel hand rail to be used in place of 8"x11.5#[when so noted on plans.

Approved:

Bridge Engineer.

Revised June 27, 1934

OREGON
STATE HIGHWAY COMMISSION

STANDARD
200' THRU STEEL TRUSS

LOADING H-15

24' CLEAR ROADWAY 2-3'-6" SIDEWALKS

GENERAL DETAILS

SCALE AS NOTED
CALC. BK. NO. 146

DRAWN BY I.D.M.
CHECKED BY L.S.S.
SHEET 1 OF 2

MAY 4 1934
DRAWING NO. 5236

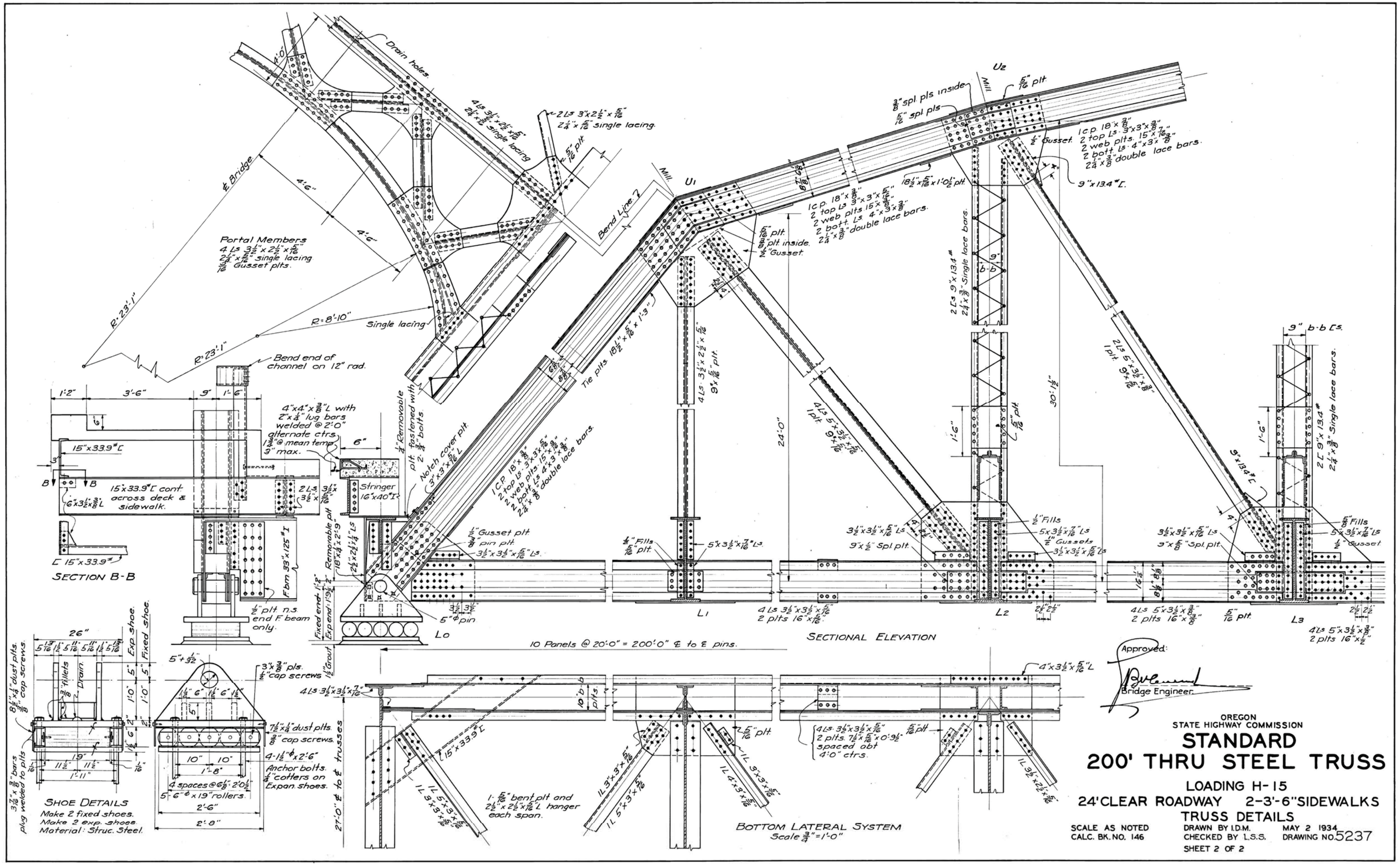
Drain holes.
4 Ls 3½"x2½"x5/16" 2¼"x3/8" single lacing
2 Ls 3"x2½"x5/16" 2¼"x3/8" single lacing.
5/16" plt.
℄ Bridge
4'-6"
4'-6"
Portal Members
4 Ls 3½"x2½"x5/16"
2¼"x3/8" single lacing
3/16" Gusset plts.
R=23'-1"
R=8'-10"
Single lacing
R=23'-1"
Bend end of channel on 12" rad.
Bend Line
Mill
U1
U2
3/8" spl. pls inside
5/16" spl pls
5/16" plt.
1 C.P. 18"x3/8"
2 top Ls 3"x3"x5/16"
2 web plts. 15"x3/8"
2 bott. Ls 4"x3"x3/8"
2¼"x3/8" double lace bars.
1/2" Gusset.
9"x13.4# [.
18½"x5/16"x1'-0½" plt.
5/16" plt.
3/8" plt. inside.
1/2" Gusset.
2 [s 9"x13.4# 2¼"x3/8" Single lace bars.
9"
b-b
24'-0"
30'-1½"
1'-6"
5/16" plt.
2 [s 5"x3½"x3/8" 1 plt. 9"x5/16"
9"x13.4# [
2 L 9"x13.4# 2¼"x3/8" Single lace bars.
9" b-b [s.
1'-2"
3'-6"
9"
1'-6"
6"
4"x4"x3/8" L with 2"x1/4" lug bars welded @ 2'-0" alternate ctrs. 1¾" @ mean temp 3" max.
15"x33.9# [
15"x33.9# [cont across deck & sidewalk.
6"x3½"x3/8" L
2 Ls 3½"x3½"x5/16"
[15"x33.9#
SECTION B-B
F bm 33"x125# I
1/2" plt. n.s end F. beam only.
6"
1/4" Removable plt fastened with 2 3/4" bolts.
Notch cover plt 3"x3"x5/16" L
Stringer 16"x40# I
1 C.P. 18"x3/8" 2 top Ls 3"x3"x5/16" 2 web plts. 15"x3/8" 2 bott. Ls 4"x3"x3/8" 2¼"x3/8" double lace bars
1/2" Gusset plt.
3/8" pin plt.
3½"x3½"x5/16" Ls.
Removable plt 18"x1/4"x2'-9"
2¼"x2¼"x1/4" Ls
Fixed end 1'-2"
Exp end 1'-9¼"
1½" Grout
5" Φ pin
Lo
Tie plts 18½"x5/16"x1'-3"
4 Ls 3½"x2½"x5/16" 9"x5/16" plt.
4 Ls 5"x3½"x5/16" 1 plt. 9"x5/16"
1/4" Fills 5/16" plt.
5"x3½"x7/16" Ls.
L1
4 Ls 3½"x3½"x5/16" 2 plts 16"x5/16"
3½"x3½"x5/16" Ls
9"x1/2" Spl plt.
1/2" Fills
5"x3½"x7/16" Ls
1/2" Gussets
3½"x3½"x5/16" Ls
L2
3½"x3½"x5/16" Ls
9"x5/8" Spl. plt.
5/8" Fills
5"x3½"x7/16" Ls
1/2" Gusset.
4 Ls 5"x3½"x3/8" 2 plts 16"x3/8"
5/16" plt.
L3
4 Ls 5"x3½"x3/8" 2 plts 16"x1/2"
SECTIONAL ELEVATION
10 Panels @ 20'-0" = 200'-0" ℄ to ℄ pins.
26"
5/16" 1½" 5/16" 1½" 5/16" 1½" 5/16"
Exp. shoe
Fixed shoe
8 1/4" x 1/4" dust plts.
3/8" cap screws.
3/8" fillets
Drain
5"
1'-0"
1'-0"
2"
1½"
6"
19"
11½"
11½"
1/16"
1'-11"
3 7/16" x 3/8" bars plug welded to plts
SHOE DETAILS
Make 2 fixed shoes.
Make 2 exp. shoes.
Material: Struc. Steel.
5" + 1/32"
3"x3/8" pls.
1/2" cap screws
1½" 6" 1½" 6" 1½"
5"
7½"x1/4" dust plts.
3/8" cap screws.
10" 10"
1'-8"
4 spaces @ 6½" 2'-0½"
5'-6" Φ x 19" rollers.
2'-6"
2'-0"
4-1½" Φ x 2'-6" Anchor bolts.
1/4" cotters on Expan. shoes.
4 Ls 3½"x3½"x7/16"
10" b-b plts.
27'-0" ℄ to ℄ trusses
15"x33.9# [
1 L 5"x3"x5/16"
1 L 3"x3"x5/16"
1-5/16" bent plt and 2½"x2½"x5/16" L hanger each span.
5/16" plt.
1 L 3"x3"x5/16"
1 L 4"x3"x5/16"
1 L 5"x3"x5/16"
4 Ls 3½"x3½"x5/16" 2 plts. 7½"x5/16"x0'-9½" spaced abt 4'-0" ctrs.
5/16" plt.
4"x3½"x5/16" L
1 L 3½"x2½"x5/16"
BOTTOM LATERAL SYSTEM
Scale 3/4" = 1'-0"
Approved:
Bridge Engineer.
OREGON
STATE HIGHWAY COMMISSION
STANDARD
200' THRU STEEL TRUSS
LOADING H-15
24' CLEAR ROADWAY 2-3'-6" SIDEWALKS
TRUSS DETAILS
SCALE AS NOTED
CALC. BK. NO. 146
DRAWN BY I.D.M.
CHECKED BY L.S.S.
MAY 2 1934
DRAWING NO. 5237
SHEET 2 OF 2

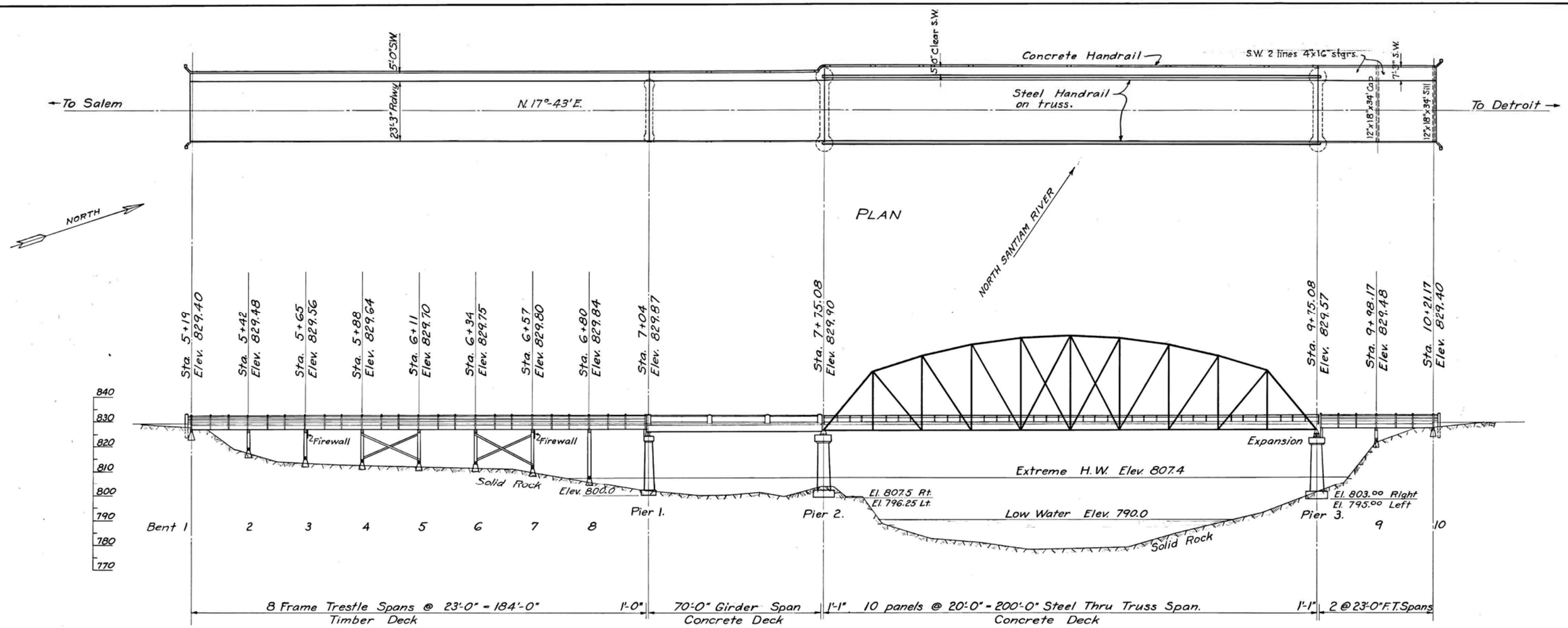

ELEVATION
Scale 1" = 20'-0"

GENERAL NOTES:

All concrete shall be as called for on plans.

All reinforcing steel shall be deformed bars placed 2" clear from nearest face of concrete except where noted or shown otherwise and shall be of intermediate grade. Allowable strength = 18000 #/□".

Footing elevations may be varied at the discretion of the Engineer in order to secure suitable foundations.

All timber shall be graded according to the timber specifications of the O.S.H.C.

All material and workmanship shall conform to the specifications for bridges of the Oregon State Highway Commission.

Revised June 7, 1934

Approved:

Bridge Engineer

State Highway Engineer

As constructed 1-18-73

OREGON
STATE HIGHWAY COMMISSION

MILL CITY BRIDGE

OVER

SANTIAM RIVER – MARION & LINN CO'S.

ON

PLAN AND ELEVATION

SCALE AS NOTED	DRAWN BY M.A.L.	SHEET 1 OF 8
MAY 2, 1934	TRACED BY M.A.L.	BRIDGE NO. 2058
CALC. BK. NO.	CHECKED BY	DRAWING NO. 5242

ACCOMPANIED BY DWGS. 5032, 5236, 5237, 5243-46, 5252.

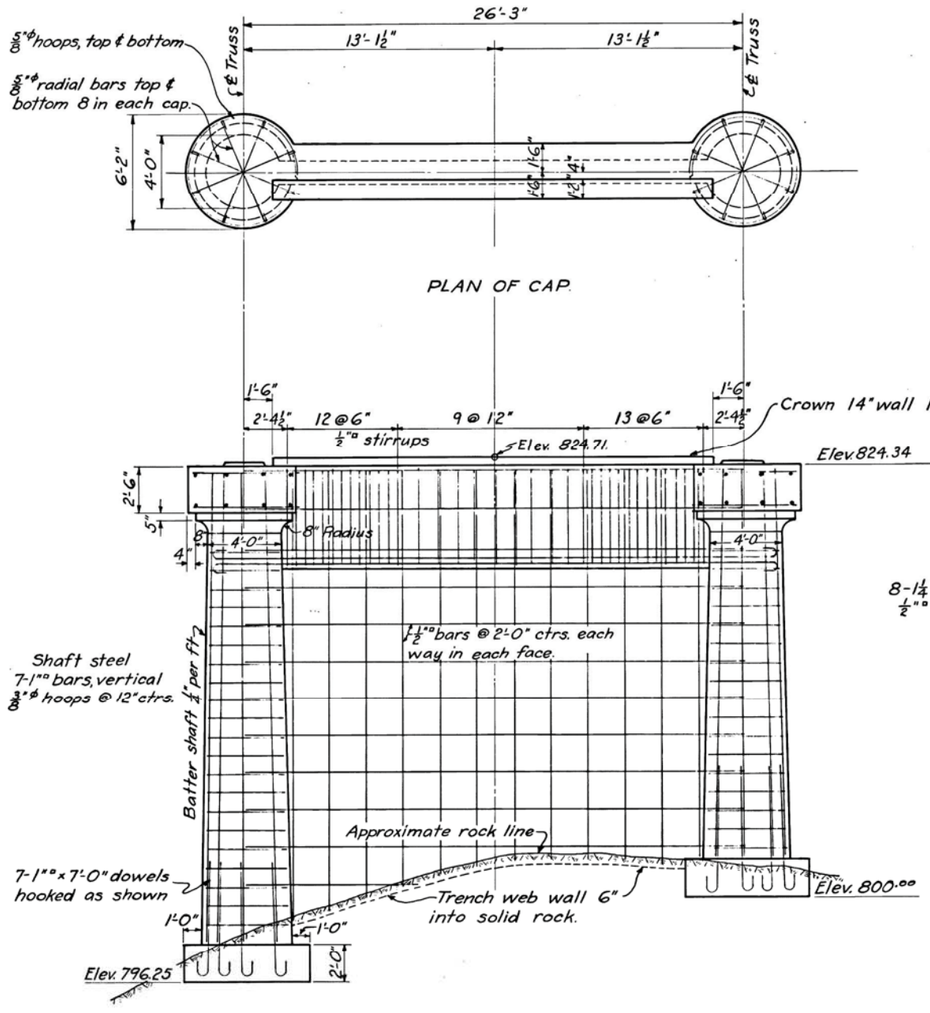

ELEVATION - PIER 2.
Scale ¼" = 1'-0"

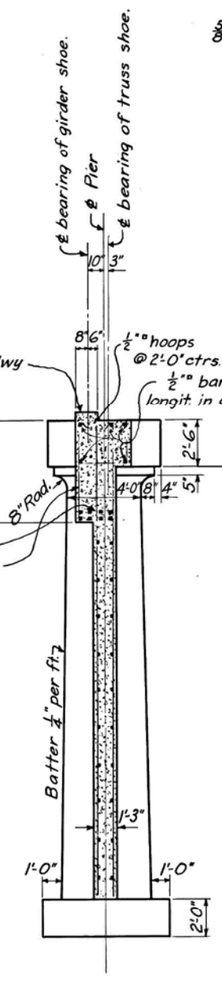

SECTION THRU PIER 2.
Scale ¼" = 1'-0"

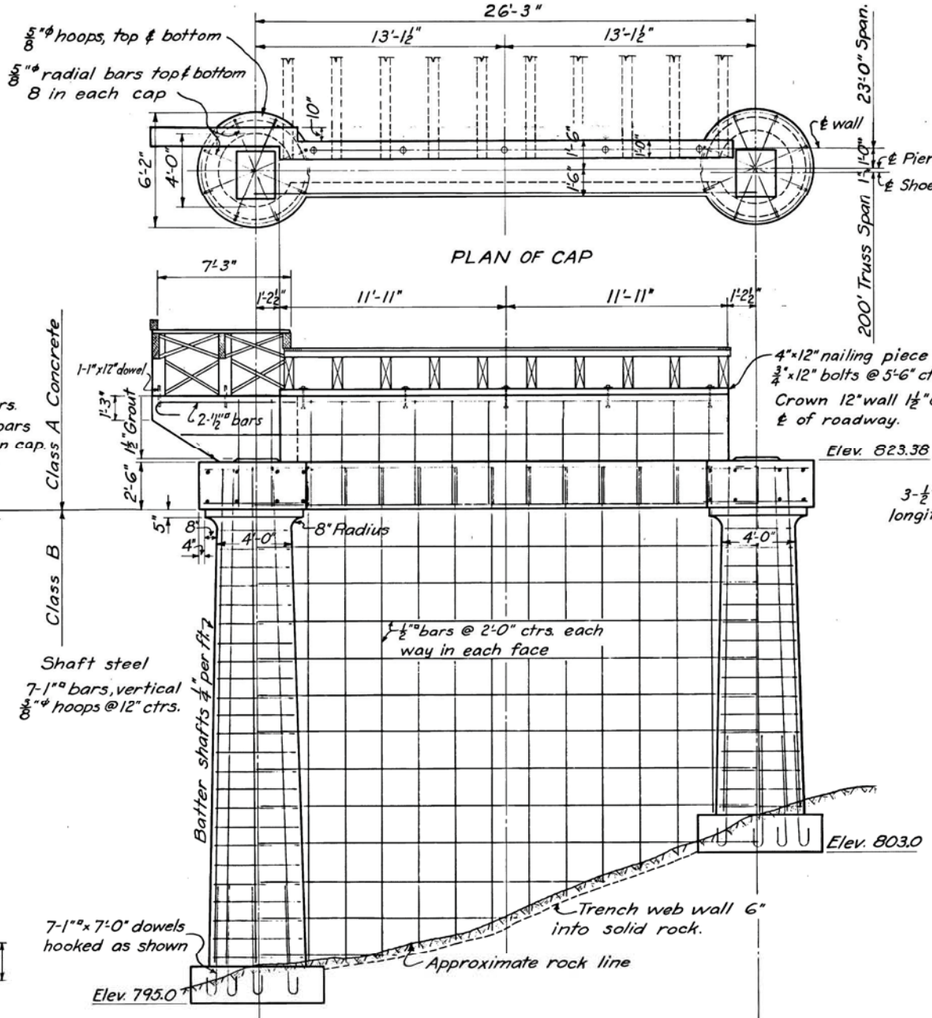

ELEVATION PIER 3.
Scale ¼" = 1'-0"

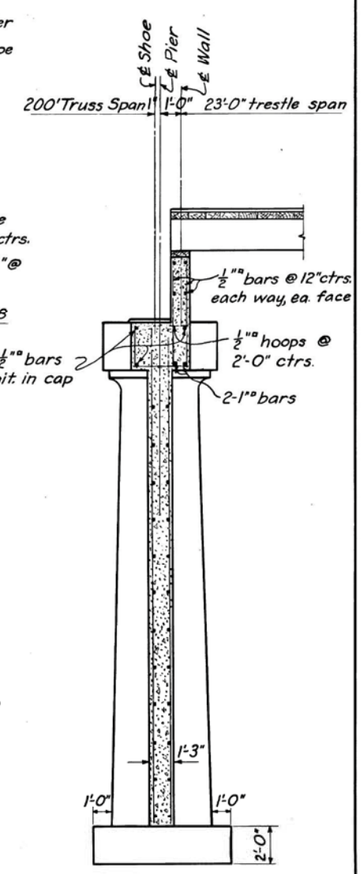

SECTION THRU PIER 3.

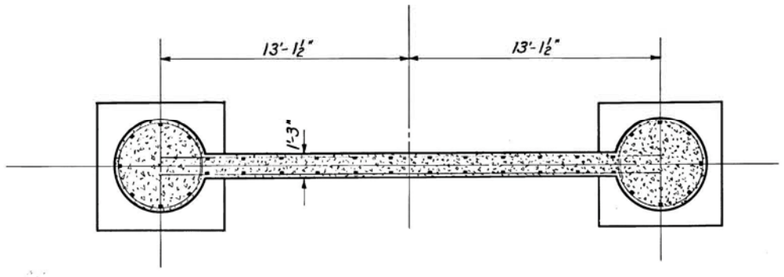

FOOTING PLAN

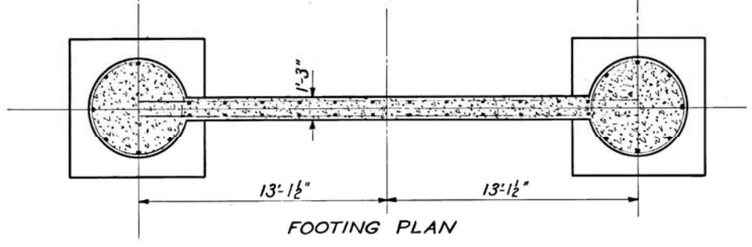

FOOTING PLAN

Revised June 7, 1934
June 27, 1934

Approved:

Bridge Engineer

OREGON
STATE HIGHWAY COMMISSION

MILL CITY BRIDGE
PIER NO. 2 & NO. 3

SCALE AS NOTED | DRAWN BY L.S.S. | TRACED BY M.A.L.
MAY 4, 1934 | CHECKED BY | DRAWING NO. 5243

BRIDGE NO. 2058

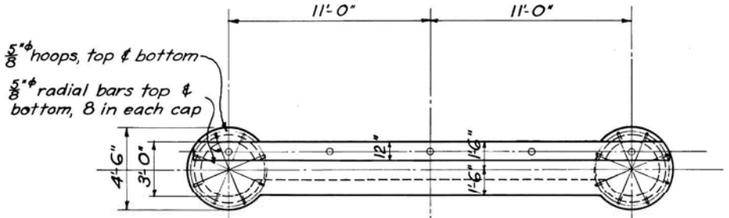

PLAN OF CAP

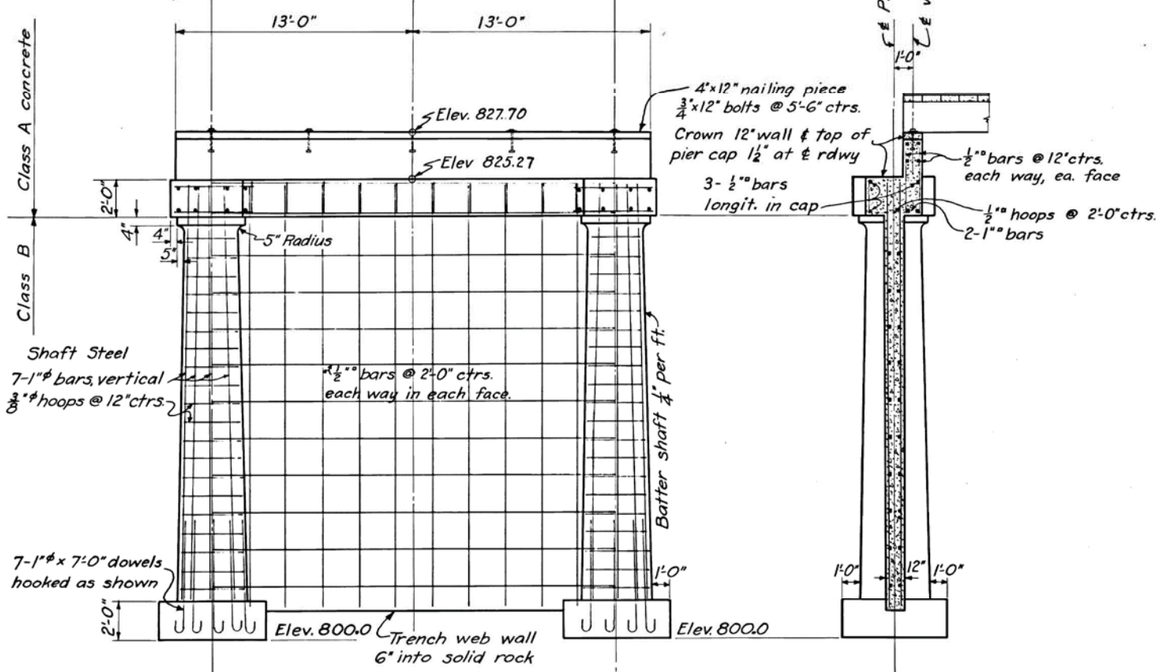

ELEVATION – PIER 1.

SECTION THRU PIER.

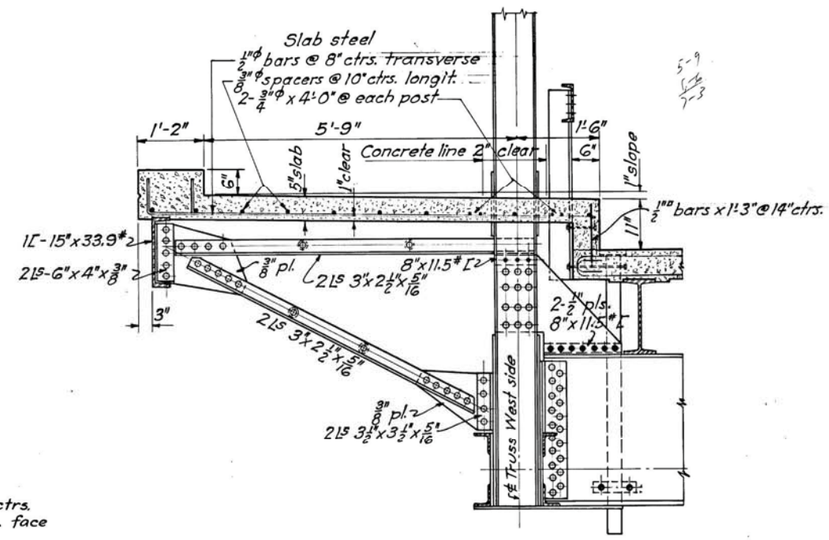

SECTION THRU SIDEWALK – TRUSS SPAN
Scale 3/4" = 1'-0"

Note: Provide for future sidewalk connection on East side of 200' truss span.
For details not shown see dwgs. No. 5236 & 5237

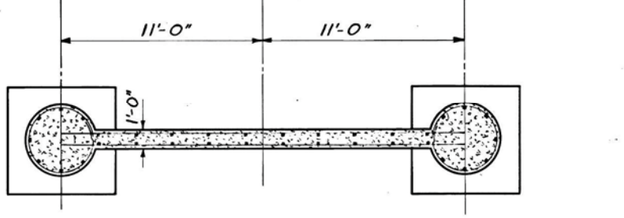

FOOTING PLAN.

Approved:

Revised June 7, 1934
June 27, 1934

Bridge Engineer.

OREGON
STATE HIGHWAY COMMISSION

MILL CITY BRIDGE
DETAILS PIER NO. 1

SCALE AS NOTED | DRAWN BY L.S.S. | TRACED BY M.A.L.
MAY 4, 1934 | CHECKED BY | DRAWING NO. 5244

BRIDGE NO. 2058

SIDE WALK MATERIAL
Posts 6"x8" S4S.
Rails 3"x8" S4S.
Deck 2"x8" planking S1S.
Dripboard 2"x12" S4S.
Curb 6"x10" S1S2E.
Felloe Guard 4"x6" S4S
Stringer 4"x14", rough

23'-3" Roadway

DECKING: 4"x12" S1S Transverse, 2"x2" S4S Port Orford or Western Red Cedar wearing surface laid longitudinally. 4"x12" planks nailed to each stringer with 1-⅞"x8" spike. 2"x2" strips toe nailed to 4"x12" planks with 30d nails at 2'-0" ctrs. Each 2"x2" strip nailed horizontally to adjacent strip with 30d nails at 2'-0" ctrs. alternating with toe nailing (See Part Deck Plan)
4"x12" decking to be given heavy mop coat of hot asphalt or emulsified asphalt before 2"x2" top decking is placed
2"x2" top decking to be laid and nailed while asphalt is plastic.
Stringers shall be sized at bearing points so as to secure a crown of 1½" and decking pieces sprung to contact.
1" spacing and ventilating blocks between intermediate stringers.

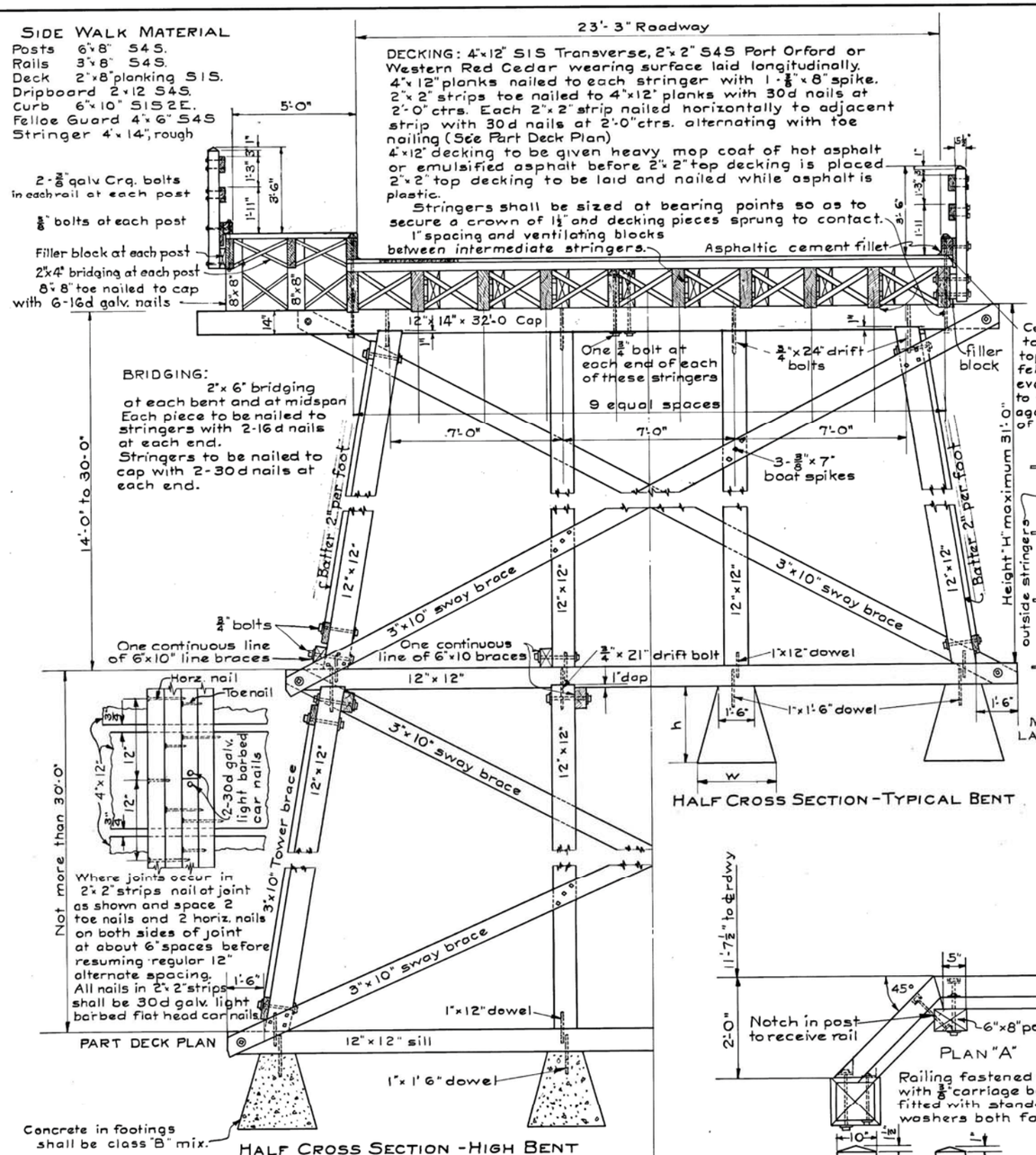

HALF CROSS SECTION - TYPICAL BENT

METHOD OF LAYING STRINGERS

HALF CROSS SECTION - HIGH BENT

FOOTING DATA

h	w	Cu.ft.
1'-0"	3'-2"	5.66
2'-0"	3'-2"	11.32
3'-0"	3'-2"	17.00
4'-0"	3'-6"	26.33
5'-0	3'-9"	36.55
6'-0"	4'-0"	48.50
Over 6'	4h + 18"	

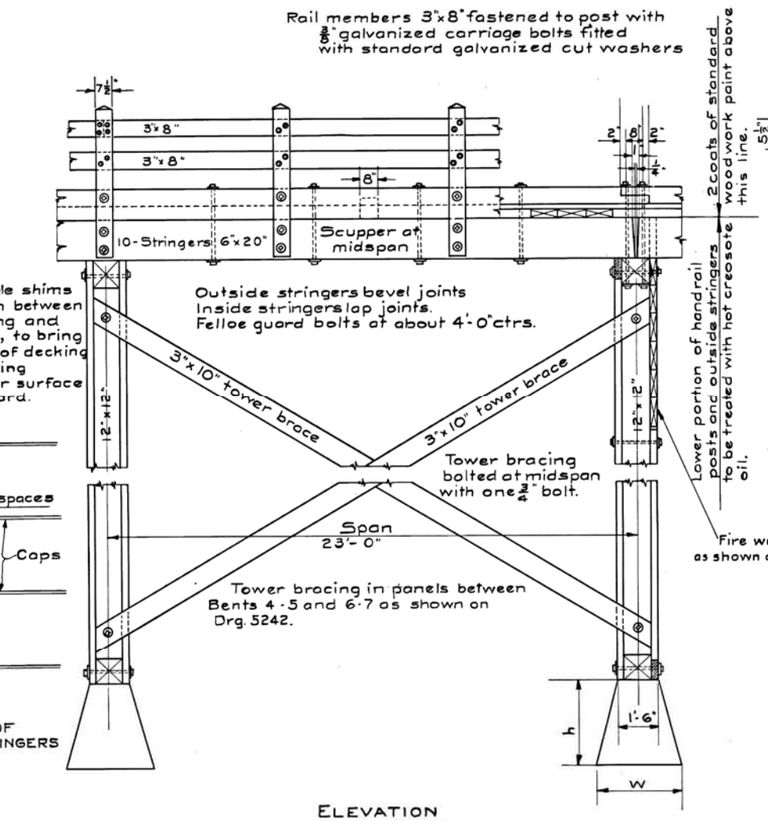

ELEVATION
Scale ⅜" = 1'-0"

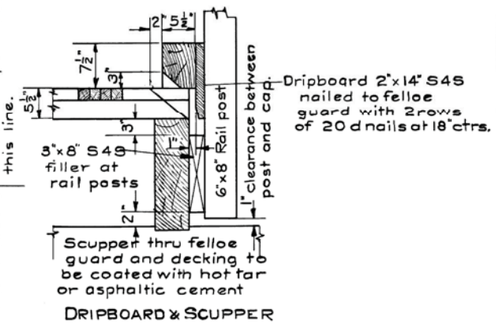

DRIPBOARD & SCUPPER

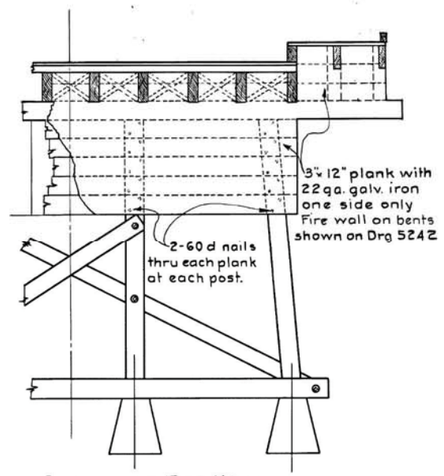

DETAILS OF FIRE WALL
Scale ¼" = 1'-0"

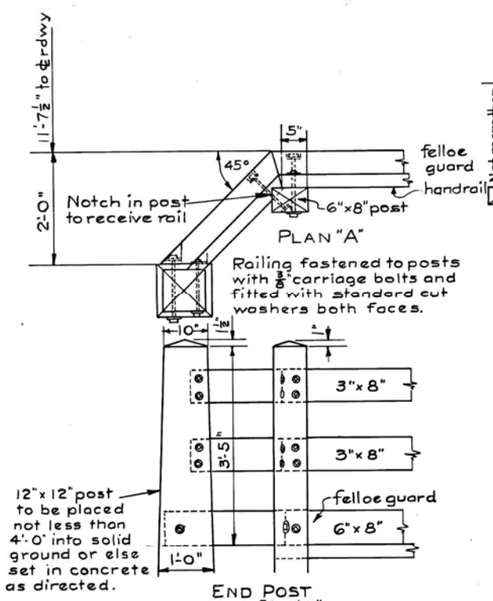

END POST
Scale ¾" = 1'-0"

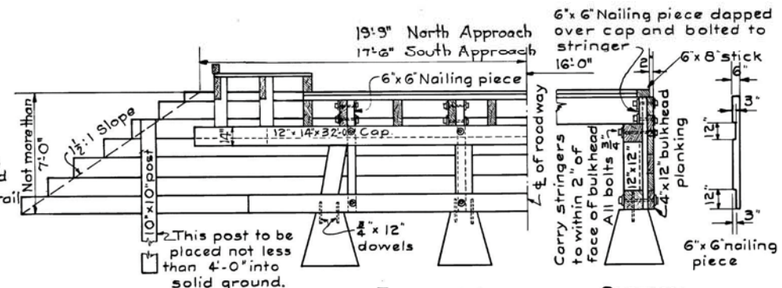

ELEVATION SECTION
BULKHEAD
Scale ¼" = 1'-0"

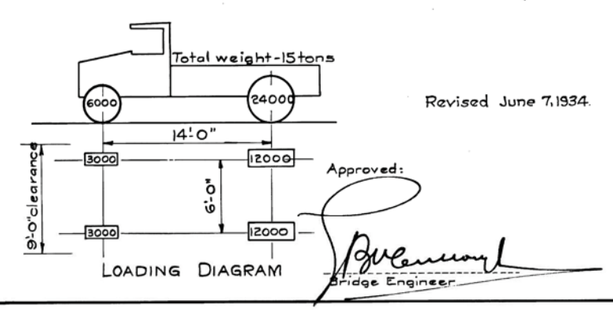

LOADING DIAGRAM

Revised June 7, 1934.

Approved:
Bridge Engineer

OREGON
STATE HIGHWAY COMMISSION

MILL CITY BRIDGE
DETAILS TRESTLE APPROACH

SCALE AS NOTED | DRAWN BY | TRACED BY C.H.R.
MAY. 16. 1934. | CHECKED BY | DRAWING NO. 5245
BRIDGE NO. 2058.

For H.R. details see dwg. no. 5032.

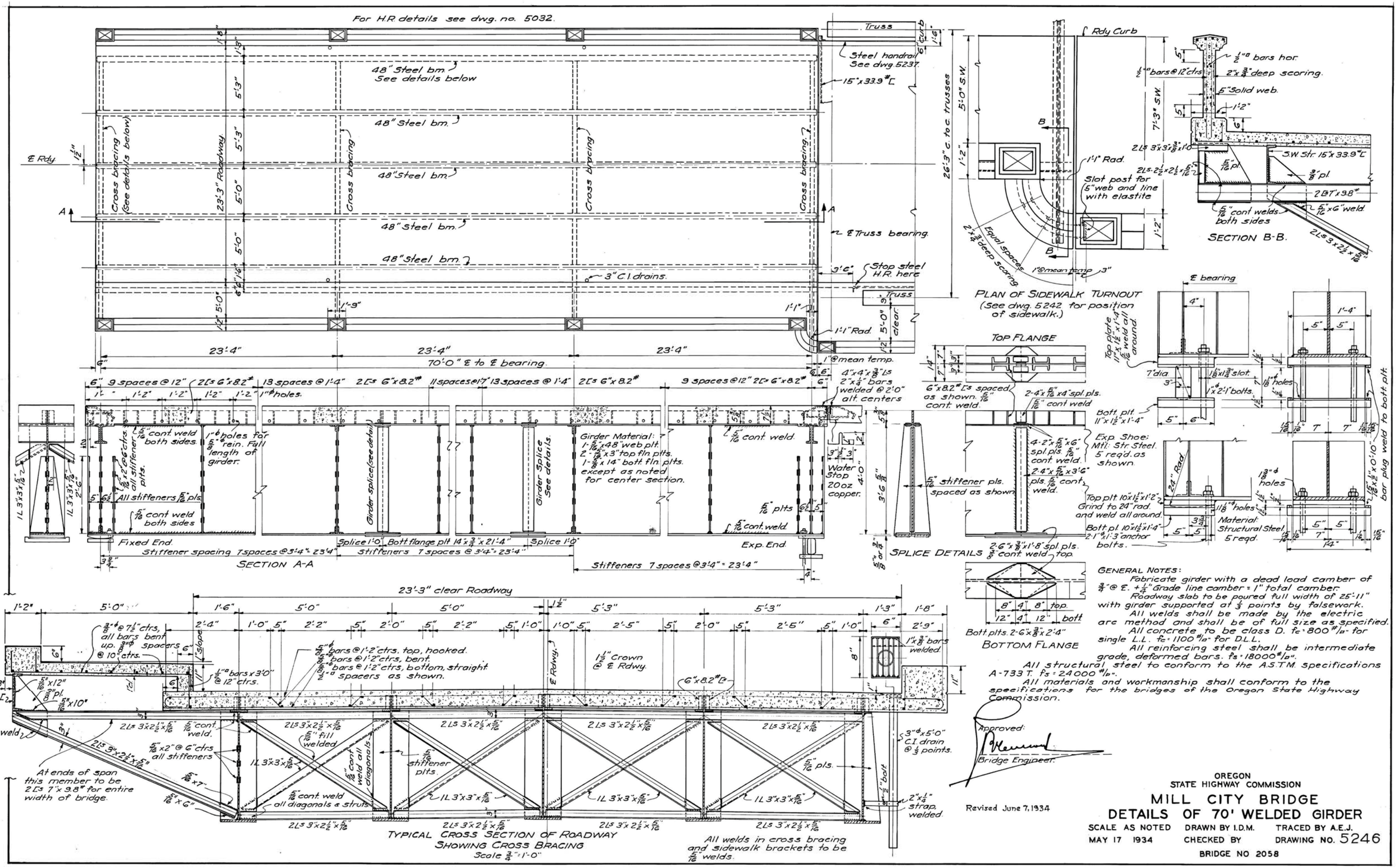

GENERAL NOTES:

Fabricate girder with a dead load camber of 3/4" @ ℄. +1/4" Grade line camber = 1" total camber.

Roadway slab to be poured full width of 25'-11" with girder supported at 1/3 points by falsework.

All welds shall be made by the electric arc method and shall be of full size as specified.

All concrete to be class D. $f_c = 800$ #/□" for single L.L. $f_c = 1100$ #/□" for D.L.L.

All reinforcing steel shall be intermediate grade, deformed bars. $f_s = 18000$ #/□".

All structural steel to conform to the A.S.T.M. specifications A-733 T. $f_s = 24000$ #/□".

All materials and workmanship shall conform to the specifications for the bridges of the Oregon State Highway Commission.

Approved:

Bridge Engineer.

Revised June 7, 1934

OREGON
STATE HIGHWAY COMMISSION

MILL CITY BRIDGE
DETAILS OF 70' WELDED GIRDER

SCALE AS NOTED | DRAWN BY I.D.M. | TRACED BY A.E.J.
MAY 17 1934 | CHECKED BY | DRAWING NO. 5246

BRIDGE NO 2058

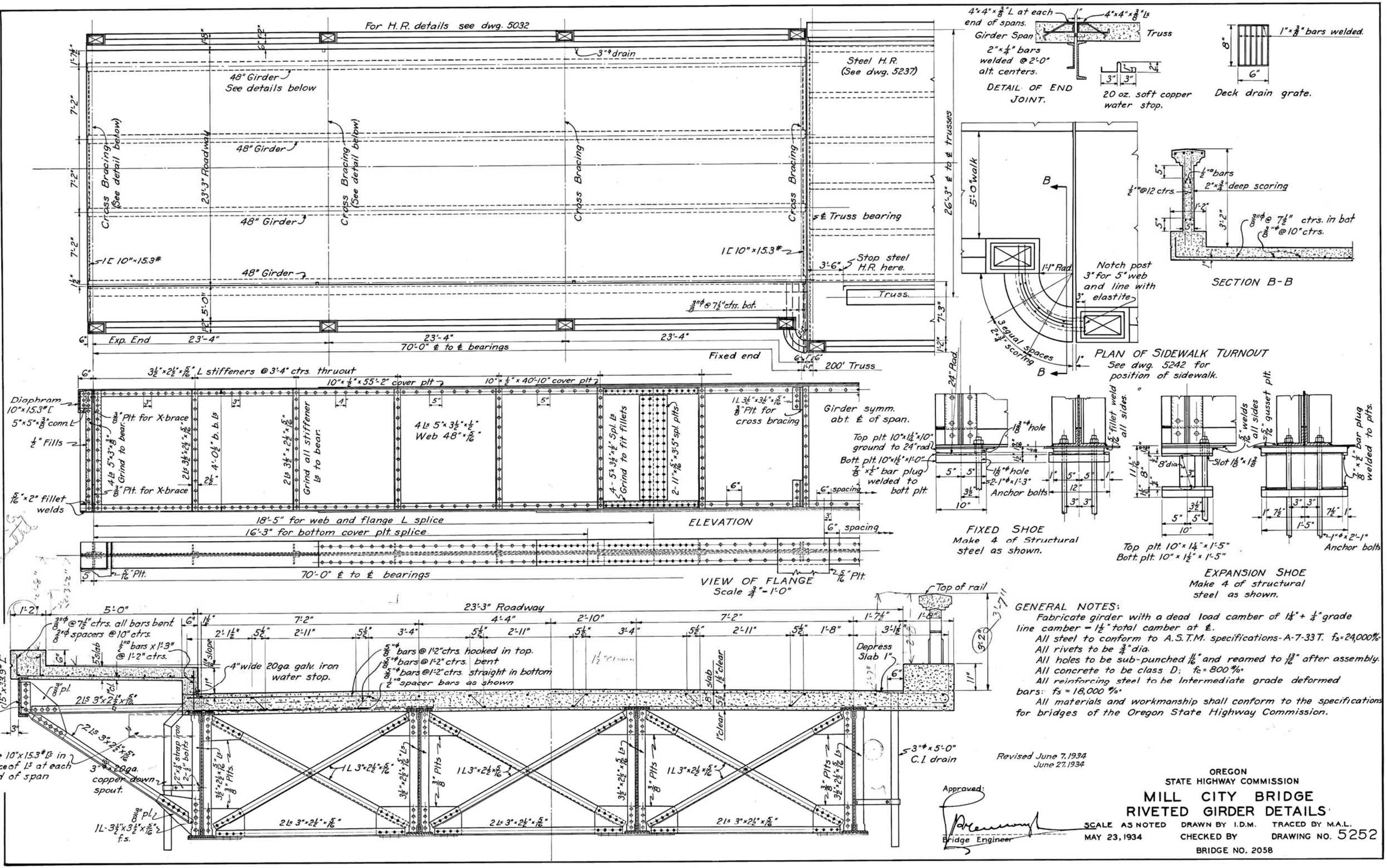

GENERAL NOTES:

Fabricate girder with a dead load camber of 1¼" + ¼" grade line camber = 1½" total camber at ℄.

All steel to conform to A.S.T.M. specifications-A-7-33T. f_s = 24,000#/□"

All rivets to be ¾" dia.

All holes to be sub-punched 11/16" and reamed to 13/16" after assembly.

All concrete to be class D; f_c = 800#/□"

All reinforcing steel to be Intermediate grade deformed bars: f_s = 18,000#/□"

All materials and workmanship shall conform to the specifications for bridges of the Oregon State Highway Commission.

Revised June 7, 1934
June 27, 1934

Approved:

Bridge Engineer

OREGON
STATE HIGHWAY COMMISSION

MILL CITY BRIDGE
RIVETED GIRDER DETAILS

SCALE AS NOTED | DRAWN BY I.D.M. | TRACED BY M.A.L.
MAY 23, 1934 | CHECKED BY | DRAWING NO. 5252

BRIDGE NO. 2058

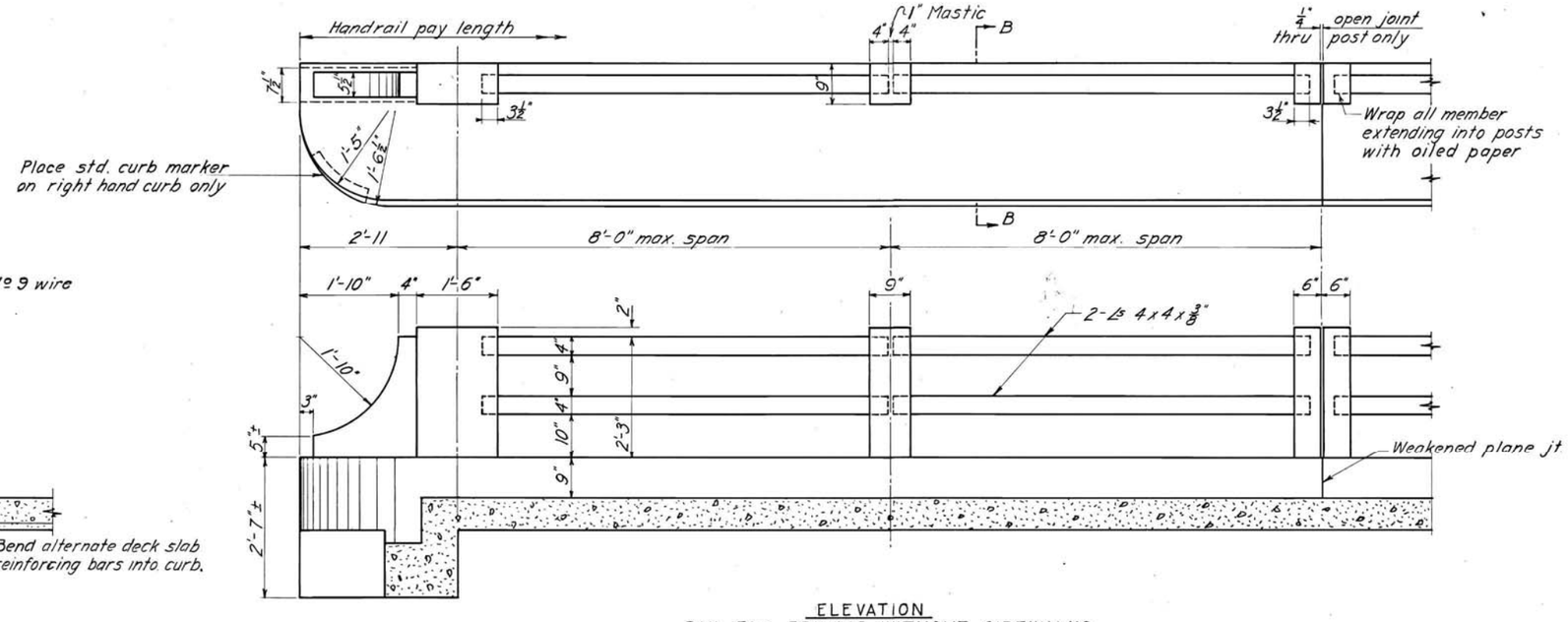

ELEVATION
RAIL FOR BRIDGES WITHOUT SIDEWALKS
Scale 3/4" = 1'-0"

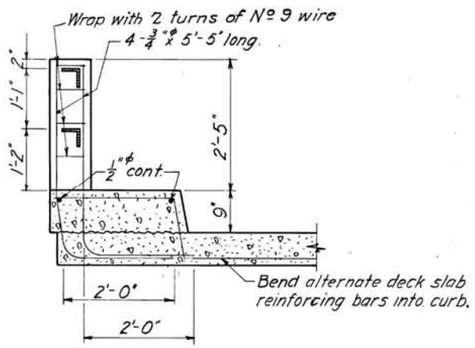

SECTION B-B

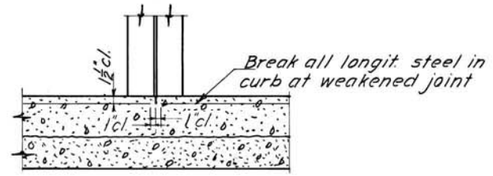

SECTION C-C

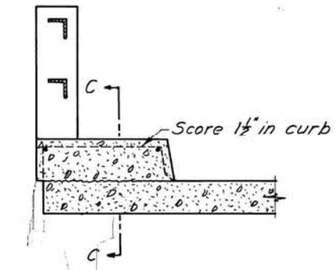

WEAKENED PLANE JOINT
Scale 3/4" = 1'-0"

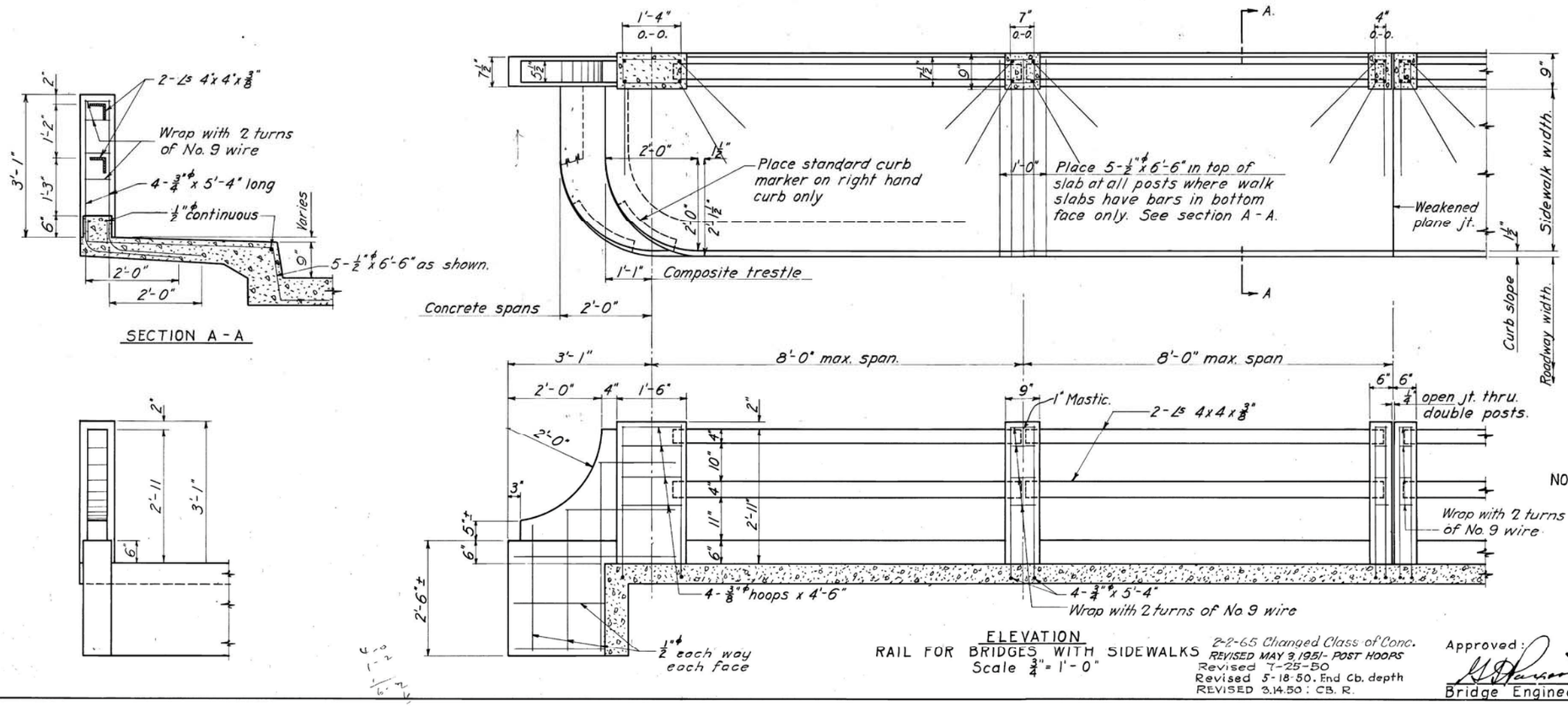

ELEVATION
RAIL FOR BRIDGES WITH SIDEWALKS
Scale 3/4" = 1'-0"

2-2-65 Changed Class of Conc.
REVISED MAY 3, 1951 - POST HOOPS
Revised 7-25-50
Revised 5-18-50. End Cb. depth
REVISED 3.14.50 : CB. R.

SECTION A-A

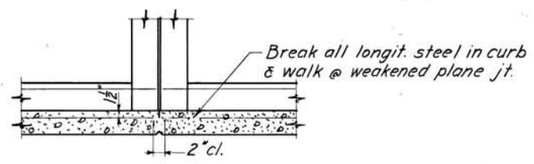

SECTION D-D.

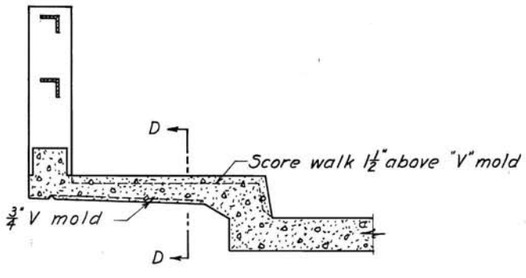

WEAKENED PLANE JOINT
Scale 3/4" = 1'-0"

NOTES: All concrete shall be Class "A" mix with a breaking strength of 3300 p.s.i in 28 days, f_c = 1100 p.s.i. All reinforcing steel shall be intermediate grade, deformed bars, f_s = 20,000 p.s.i.

Approved: [signature]
Bridge Engineer.

OREGON
STATE HIGHWAY COMMISSION

STANDARD STEEL HANDRAIL

SCALE NOTED.	DRAWN BY T. B. H.	TRACED BY O. F. D.
MAR. 23, 1948	CHECKED BY	DRAWING NO. 8956

VOID

RECEIVED FEB 2 1965

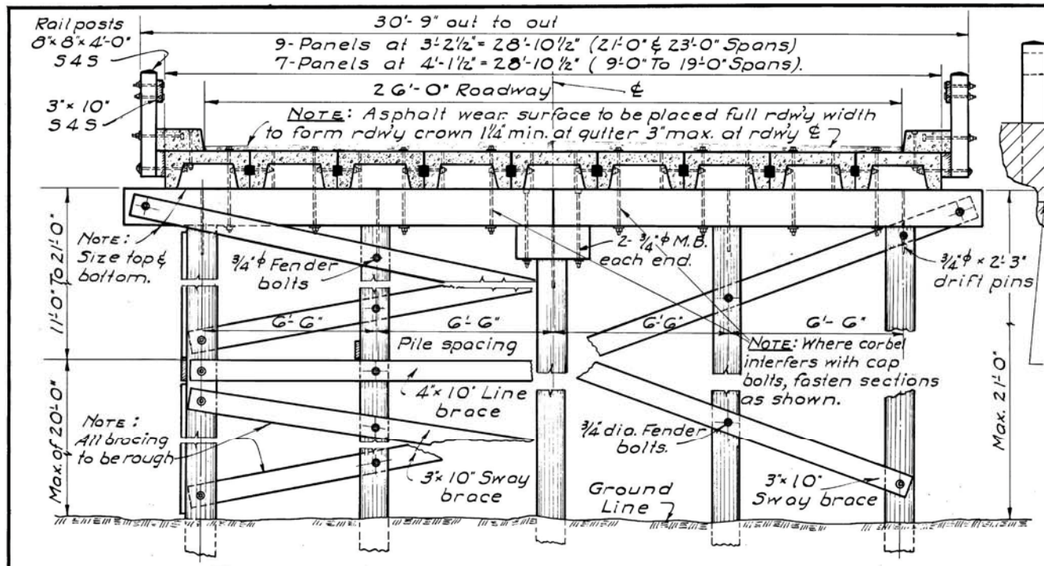

TYPICAL TRANSVERSE SECTION – 26'-0" ROADWAY

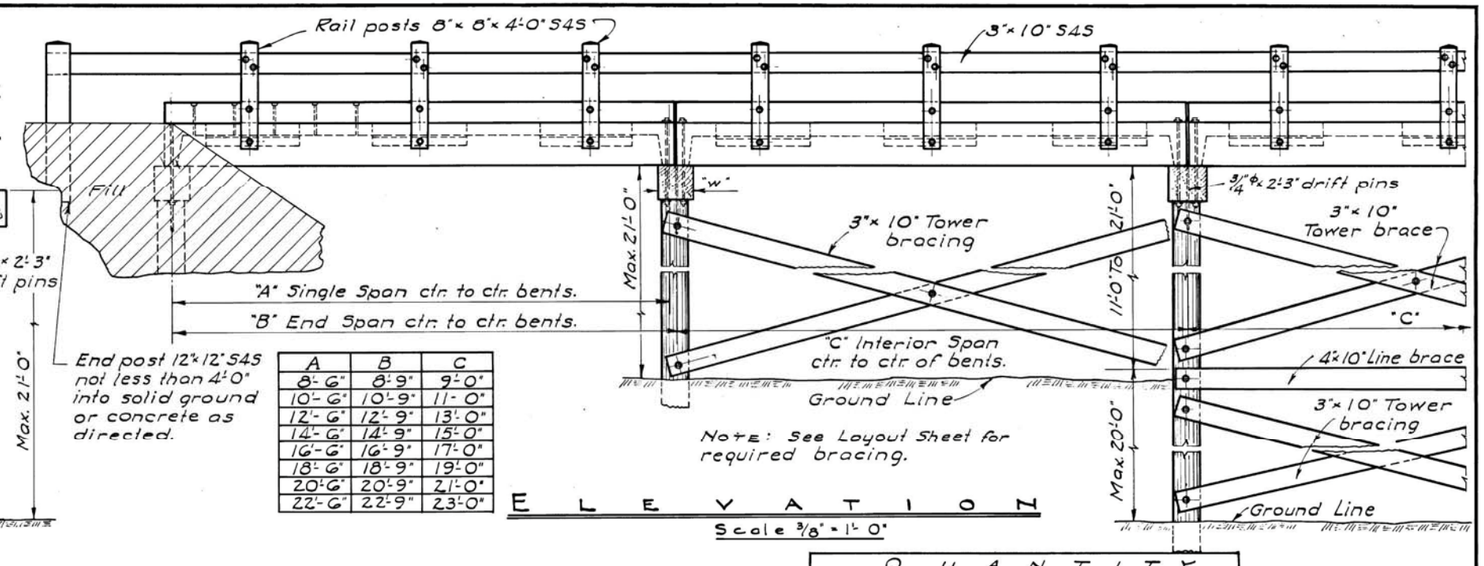

A	B	C
8'-6"	8'-9"	9'-0"
10'-6"	10'-9"	11'-0"
12'-6"	12'-9"	13'-0"
14'-6"	14'-9"	15'-0"
16'-6"	16'-9"	17'-0"
18'-6"	18'-9"	19'-0"
20'-6"	20'-9"	21'-0"
22'-6"	22'-9"	23'-0"

ELEVATION

Scale ⅜" = 1'-0"

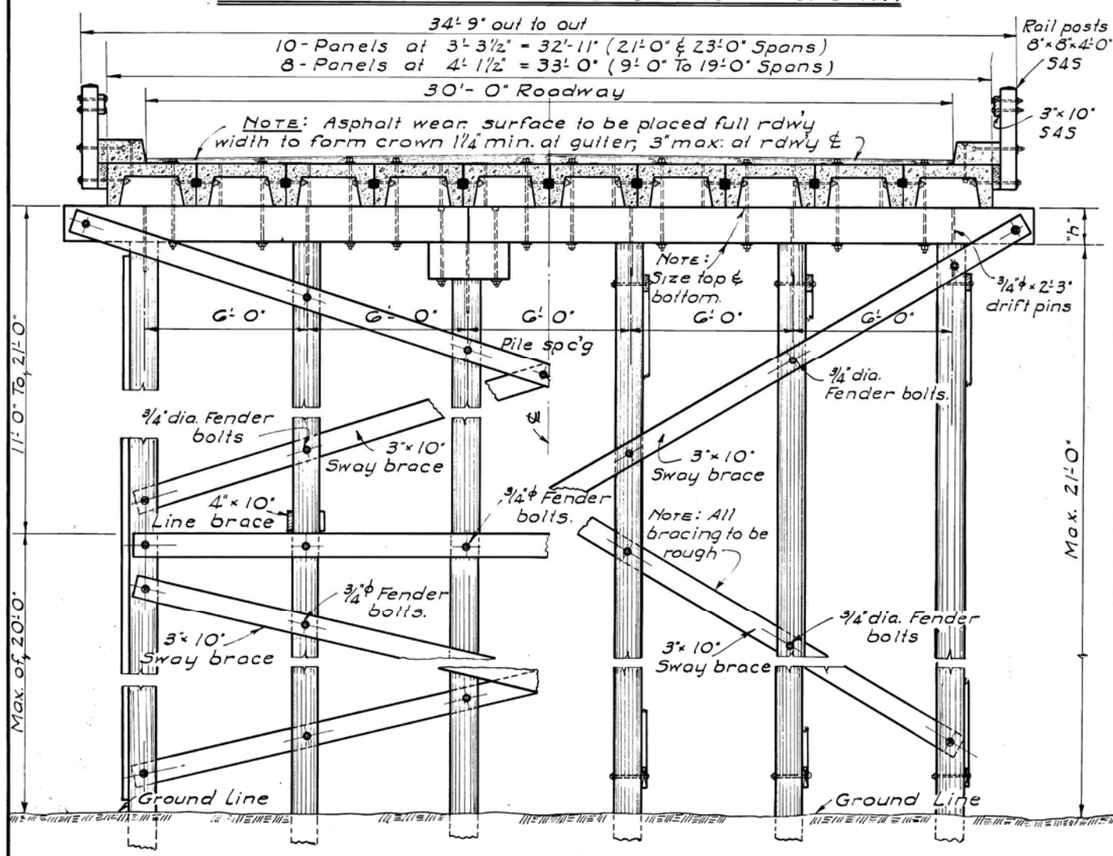

TYPICAL TRANSVERSE SECTION – 30'-0" ROADWAY

Scale ⅜" = 1'-0"

Span	26'-0" Roadway Cap W	Cap h	Corbel Size	30'-0" Roadway Cap W	Cap h	Corbel Size	Max. Pile Load End Bents	Interior Bents	Quantity: 26'-0" and 30'-0" Roadway 1-Panel Rdw'y Width	Cu. Ft.	Lb's Str'l	Total Wt.	1-Curb Cu. Ft.	Lb's Steel	Total Wt.	26'-0" Roadway 1-Span Cu. Yd's	Lb's Steel	Total Wt.	30'-0" Roadway 1-Span Cu. Yds.	Lbs Steel	Total
9'-0"	16"	11½"	16"×11½"×3'-0"	16"	11½"	16"×11½"×3'-0"	10.2 Ton	12.5 Ton	26'&30'	28.8	484	4320#	13.0	146	1945#	8.42	3680#	34,140#	9.50	4164#	38460#
11'-0"	16"	11½"	16"×11½"×3'-0"	16"	11½"	16"×11½"×3'-0"	11.0 Ton	14.0 Ton	26'&30'	38.4	551	5760#	15.9	179	2380#	11.13	4215#	45,090#	12.56	4766#	50,850#
13'-0"	16"	11½"	16"×11½"×3'-0"	16"	11½"	16"×11½"×3'-0"	11.0 Ton	13.9 Ton	26'&30'	38.6	579	5790#	18.7	212	2810#	11.39	4477#	46,140#	12.83	5056#	51945#
15'-0"	16"	11½"	16"×11½"×3'-0"	16"	13½"	16"×13½"×3'-0"	11.9 Ton	15.5 Ton	26'&30'	44.3	728	6645#	21.6	246	3245#	13.08	5588#	52,995#	14.73	6316#	59640#
17'-0"	16"	13½"	16"×13½"×3'-0"	16"	13½"	16"×13½"×3'-0"	13.2 Ton	17.4 Ton	26'&30'	49.3	835	7395#	24.5	279	3680#	14.60	6403#	59,115#	16.42	7238#	66510#
19'-0"	16"	15½"	16"×15½"×3'-0"	16"	15½"	16"×15½"×3'-0"	14.6 Ton	19.8 Ton	26'&30'	58.4	903	8760#	27.4	313	4110#	17.17	6947#	69540#	19.33	7850#	78,300#
21'-0	16"	17½"	16"×17½"×3'-0"	16"	15½"	16"×15½"×3'-0"	15.0 Ton	20.2 Ton	26'-0" 30'-0"	56.1 57.0	897	8415# 8550#	30.3	347	4540#	20.94	8767#	84825#	23.58	9664#	95,490#
23'-0	16"	17½"	16"×17½"×3'-0"	16"	15½"	16"×15½"×3'-0"	16.2 Ton	22.2 Ton	26'-0" 30'-0"	66.0 66.9	955	9900# 10035#	33.2	379	4980#	24.46	9353#	99060#	27.24	10308#	110,310#

Alternate Panel Quantity 26' & 30' Roadway 1-Panel Cu. Ft.	Lb's Steel	Total Wt.	Span	
31.3	570	4695#	9'-0"	
42.3	650	6345#	11'-0"	
41.2	718	6180#	13'-0"	
47.3	918	7095#	15'-0"	
53.2	1080	7980#	17'-0"	
64.0	1170	9600#	19'-0"	
63.1	1180	9465#	21'-0"	26' Rdw'y
64.1		9615#		30' Rdw'y
74.0	1270	11100#	23'-0"	26' Rdw'y
75.0		11250#		30' Rdw'y

TOWER BRACING:
Tower bracing shall be used as follows:-
For trestles less than 15 ft. in height, every fourth panel braced.
For trestles between 15 ft. & 25 ft. height, every third panel braced.
For trestles over 25 ft. height, every second panel braced.
TRESTLE BOLTS: Use ¾" dia. galv. bolts with galv. cast-iron ribbed washers, bolts to be placed as shown.
TIE BOLTS: Use ¾" dia. × 20" galv. bolts with galv. beveled cast-iron washers.
CURB BOLTS: Use ¾" dia. × 18" sq. hd. bolts with galv. cast iron ribbed washers.
CAP BOLTS: Use ¾" dia. bolts with galv. cast-iron ribbed washers.

GENERAL NOTES
All material and workmanship shall conform to the specifications of the Oregon State Highway Commission.
Structures designed for H 20-S16-44 loading.
(4) All concrete shall be class 3300-1½ (fc = 1320 psi).
(5) All reinforcing steel shall conform to ASTM Specification A615, Grade 60 (fs = 24,000 psi).
The following splice lengths shall be used (unless shown otherwise):
(6)

Bar Size	Splice Length	Bar Size	Splice Length	Bar Size	Splice Length
3	1'-0"	7	2'-9"	11	7'-1"
4	1'-4"	8	3'-7"	14 & 18	Not permitted
5	1'-8"	9	4'-7"		
6	2'-0"	10	5'-9"		

All bars shall be placed 2" clear of nearest face of concrete unless otherwise shown.
All timber to be const. grade or better.
All piling and timber to be treated. Handrail posts and handrail to be painted. Pile heads to be treated as per specifications.
Drains to be plugged when over fill or road.
Curbs and panels to be kept upright at all times and supported at pickup points only.
All bolt holes cast nominal size of bolt plus ¼".
No traffic shall be allowed on structure until grout in shear keys has been placed at least 3 days.
Paving shall be depressed at drain holes as required.
(2) All concrete shall attain a strength of 2,000 p.s.i. before moving

FOR INFORMATION ONLY

Date	Revision
3/10/58	(1) Was Sheet 1 of 2
3/20/58	(2) Added Note
8/12/59	(3) "h" dimension
11-19-74	(4) Revised Concrete note
11-22-74	(5) Revised reinf. steel note
9-19-79	(6) Revised reinf. steel note

APPROVED T. M. Stephenson
BRIDGE ENGINEER
DESIGNED F. G. CHECKED J.M.T.
DRAWN F. G. CALC. BOOK 389

OREGON STATE HIGHWAY DEPARTMENT
BRIDGE DIVISION

STANDARD PILE TRESTLE FOR PRECAST CONC. DECK-26' & 30' RDW'Y

BENT DETAILS

DATE DEC. 19, 1956 (1) SHEET 1 OF 3
ACCOMP. BY DWG'S NO. 13118 & 14004 (1)
DRAWING NO. 13117

5-19

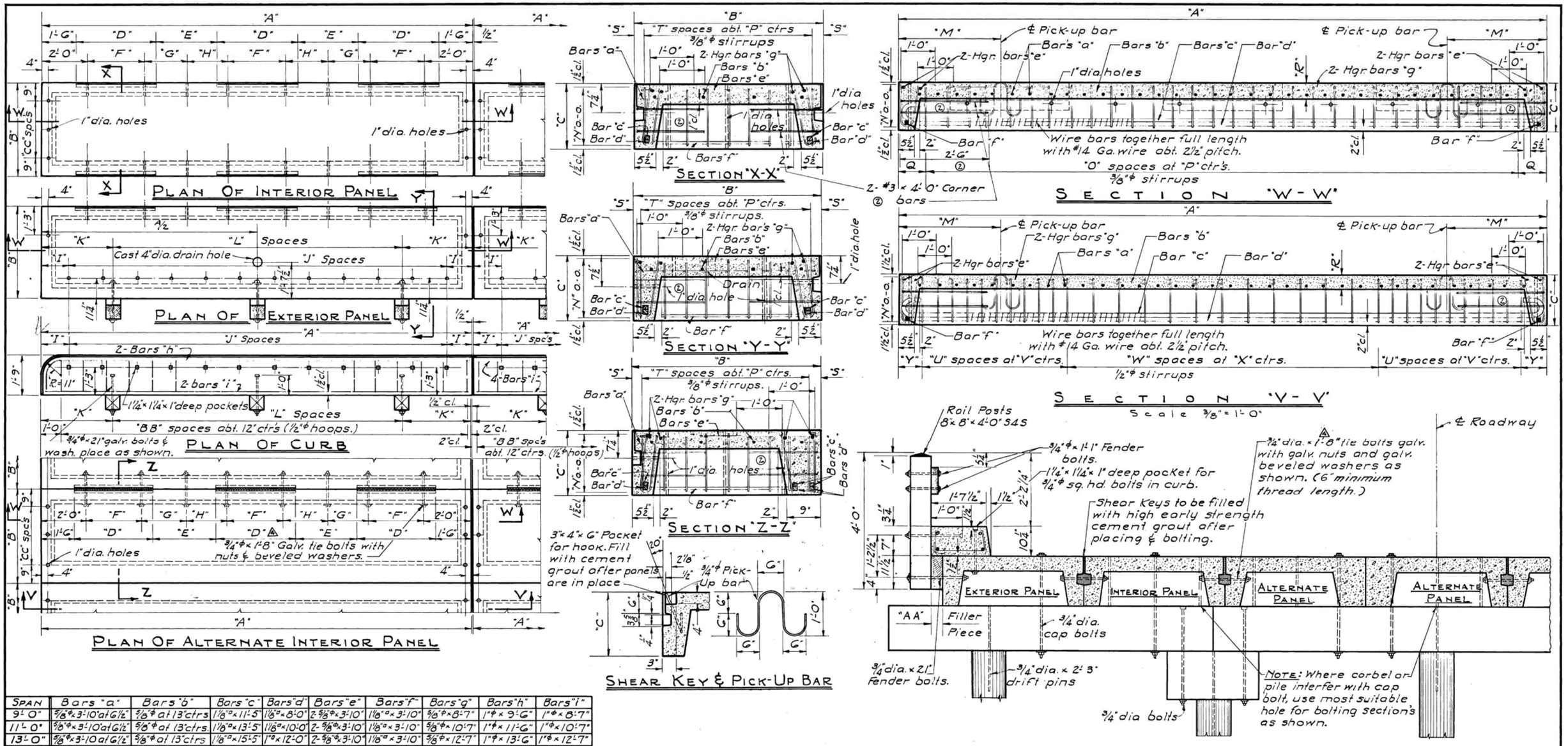

SPAN	Bars "a"	Bars "b"	Bars "c"	Bars "d"	Bars "e"	Bars "f"	Bars "g"	Bars "h"	Bars "i"
9'-0"	5/8" ϕ x 3'-10" at 6 1/2"	5/8" ϕ at 13" ctrs	1 1/8" ϕ x 11'-5"	1 1/8" ϕ x 8'-0"	2-5/8" ϕ x 3'-10"	1 1/8" ϕ x 3'-10"	5/8" ϕ x 8'-7"	1" ϕ x 9'-6"	1" ϕ x 8'-7"
11'-0"	5/8" ϕ x 3'-10" at 6 1/2"	5/8" ϕ at 13" ctrs.	1 1/8" ϕ x 13'-5"	1 1/8" ϕ x 10'-0"	2-5/8" ϕ x 3'-10"	1 1/8" ϕ x 3'-10"	5/8" ϕ x 10'-7"	1" ϕ x 11'-6"	1" ϕ x 10'-7"
13'-0"	5/8" ϕ x 3'-10" at 6 1/2"	5/8" ϕ at 13" ctrs	1 1/8" ϕ x 15'-5"	1" ϕ x 12'-0"	2-5/8" ϕ x 3'-10"	1 1/8" ϕ x 3'-10"	5/8" ϕ x 12'-7"	1" ϕ x 13'-6"	1" ϕ x 12'-7"
15'-0"	5/8" ϕ x 3'-10" at 6 1/2"	5/8" ϕ at 13" ctrs	1 1/4" ϕ x 17'-9"	1 1/8" ϕ x 13'-9"	2-5/8" ϕ x 3'-10"	1 1/8" ϕ x 3'-10"	5/8" ϕ x 14'-7"	1" ϕ x 15'-6"	1" ϕ x 14'-7"
17'-0"	5/8" ϕ x 3'-10" at 6 1/2"	5/8" ϕ at 13" ctrs	1 1/4" ϕ x 19'-9"	1 1/4" ϕ x 15'-2"	2-5/8" ϕ x 3'-10"	1 1/8" ϕ x 3'-10"	5/8" ϕ x 16'-7"	1" ϕ x 17'-6"	1" ϕ x 16'-7"
19'-0"	5/8" ϕ x 3'-10" at 6 1/2"	5/8" ϕ at 13" ctrs	1 1/4" ϕ x 21'-9"	1 1/4" ϕ x 16'-7"	2-5/8" ϕ x 3'-10"	1 1/8" ϕ x 3'-10"	5/8" ϕ x 18'-7"	1" ϕ x 19'-6"	1" ϕ x 18'-7"
21'-0"	5/8" ϕ x 2'-11" at 7"	5/8" ϕ at 14" ctrs	1 1/4" ϕ x 23'-9"	1 1/4" ϕ x 18'-0"	2-5/8" ϕ x 2'-11"	1 1/8" ϕ x 2'-11"	5/8" ϕ x 20'-7"	1" ϕ x 21'-6"	1" ϕ x 20'-7"
23'-0"	5/8" ϕ x 2'-11" at 7"	5/8" ϕ at 14" ctrs	1 1/4" ϕ x 25'-9"	1 1/4" ϕ x 19'-6"	2-5/8" ϕ x 2'-11"	1 1/8" ϕ x 2'-11"	5/8" ϕ x 22'-7"	1" ϕ x 23'-6"	1" ϕ x 22'-7"

SPAN	A	B (26'-0" ROADWAY)	B (30'-0" ROADWAY)	C	D	E	F	G	H	I	J	K	L	M	N	O	P	Q	R	S	T	U	Y	W	X	Y	AA	AA	BB	CC
9'-0"	8'-11 1/2"	4'-1 1/2"	4'-1 1/2"	1'-5"	NO KEYWAYS		—	—	2'-5 3/4"	1'-5 3/4"	4 at 18"	2'-2 3/4"	1 at 4'-6"	1'-6"	1'-2"	20	4 1/2"	8 3/4"	5 1/4"	2 1/2"	10	—	—	11	8"	9 3/4"	3 3/4"	3"	8	2
11'-0"	10'-11 1/2"	4'-1 1/2"	4'-1 1/2"	1'-8"	REQUIRED		1'-0"	—	1'-11 3/4"	1'-5 3/4"	4 at 24"	2'-8 3/4"	1 at 5'-6"	1'-6"	1'-5"	21	5 1/2"	8"	5 1/4"	2 3/4"	8	—	—	11	10"	10 3/4"	3 3/4"	3"	10	2
13'-0"	12'-11 1/2"	4'-1 1/2"	4'-1 1/2"	1'-3 1/2"	2'-6"	1'-2 3/4"	1'-6"	—	2'-2 3/4"	1'-2 3/4"	7 at 18"	3'-2 3/4"	1 at 6'-6"	1'-6"	1'-0 1/2"	21	6 1/2"	9 1/2"	5 1/4"	5 1/4"	6	—	—	21	6 1/2"	9 1/2"	3 3/4"	3"	12	2
15'-0"	14'-11 1/2"	4'-1 1/2"	4'-1 1/2"	1'-3 1/2"	3'-0"	1'-5 3/4"	2'-0"	—	2'-5 3/4"	1'-5 3/4"	8 at 18"	3'-8 3/4"	1 at 7'-6"	1'-6"	1'-0 1/2"	27	6"	8 3/4"	5 1/4"	3 3/4"	7	8	5"	10	8"	9 3/4"	3 3/4"	3"	14	2
17'-0"	16'-11 1/2"	4'-1 1/2"	4'-1 1/2"	1'-3 1/2"	3'-0"	2'-5 3/4"	2'-0"	1'-8 3/4"	1'-9"	1'-1 3/4"	8 at 22"	4'-2 3/4"	1 at 8'-6"	2'-0"	1'-0 1/2"	31	6"	8 3/4"	5 1/4"	3 3/4"	7	12	4 1/2"	11	7"	9 1/4"	3 3/4"	3"	16	2
19'-0"	18'-11 1/2"	4'-1 1/2"	4'-1 1/2"	1'-3 1/2"	3'-6"	2'-8 3/4"	2'-6"	1'-10 1/4"	1'-10 1/2"	1'-2 3/4"	11 at 18"	3'-1 3/4"	2 at 6'-4"	3'-0"	1'-2 1/2"	30	7"	8 3/4"	5 1/4"	3 3/4"	6	12	5"	10	9"	8 3/4"	3 3/4"	3"	18	2
21'-0"	20'-11 1/2"	3'-2 1/2"	3'-3 1/2"	1'-6 1/2"	4'-0"	2'-11 3/4"	3'-0"	1'-11 3/4"	2'-0"	1'-5 3/4"	12 at 18"	3'-5 3/4"	2 at 7'-0"	4'-0"	1'-3 1/2"	31	7 1/2"	9 1/2"	5"	4 1/4"	4	13	5 1/2"	10	9"	9 1/4"	3 3/4"	3 1/2"	20	1
23'-0"	22'-11 1/2"	3'-2 1/2"	3'-3 1/2"	1'-9"	4'-6"	3'-2 3/4"	3'-6"	2'-1 1/4"	2'-1 1/2"	1'-8 3/4"	13 at 18"	3'-9 3/4"	2 at 7'-8"	5'-0"	1'-6"	27	9 1/2"	9 1/2"	5"	5"	3	9	6"	17	8 3/4"	9 3/8"	3 3/4"	3 1/2"	22	1

FOR INFORMATION ONLY

DATE	REVISION
3/13/58	① WAS SHEET 2 OF 2
5/20/58	② ADDED CORNER BARS
9/1/64	③ REVISED "C" DIM.
12/7/66	④ Tie bolt Length

APPROVED: T. M. Stringer Jenson
BRIDGE ENGINEER
DESIGNED F. G. CHECKED J.M.T.
DRAWN F. G. CALC. BOOK 389

OREGON STATE HIGHWAY DEPARTMENT
BRIDGE DIVISION

STANDARD PILE TRESTLE FOR PRECAST CONC. DECK-26' & 30' RDW'Y

CURB & PANEL DETAILS

DATE DEC. 19, 1956 ① SHEET 2 OF 3
BRIDGE NO. STANDARD DRAWING NO. 13118

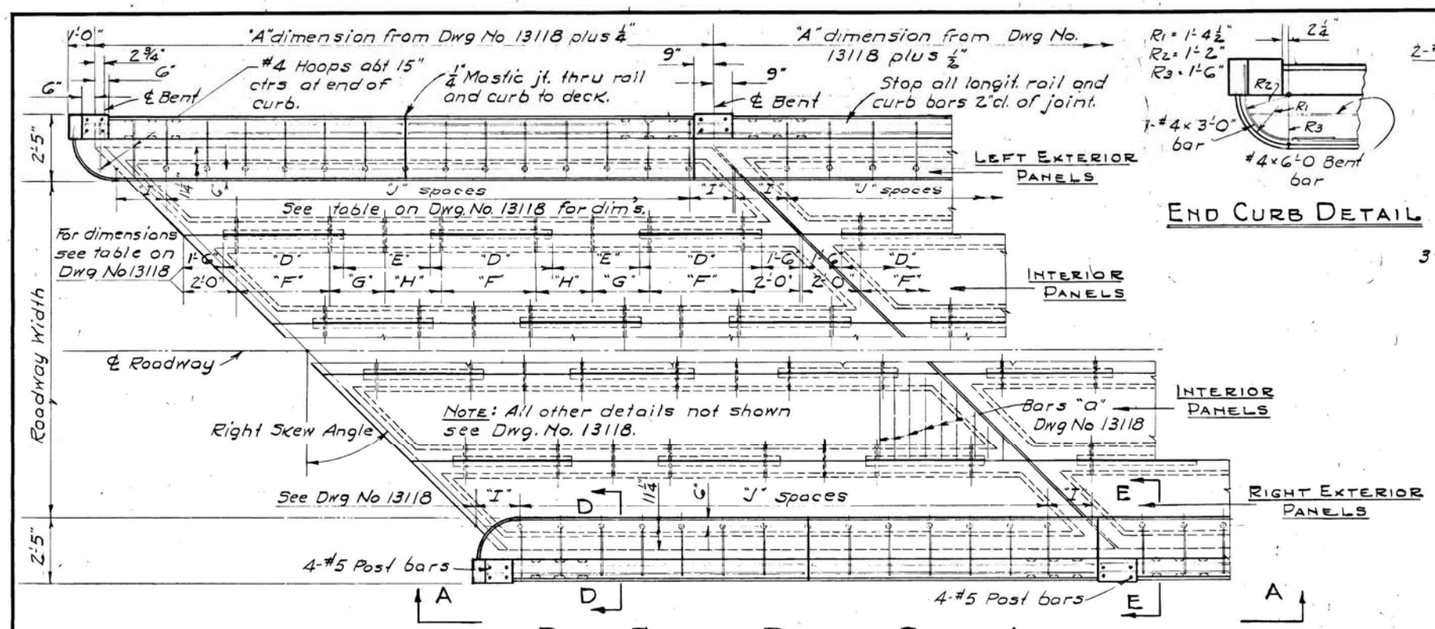

Part Plan - Right Skew Angle With Poured In Place Conc. Curb & Handrail

End Curb Detail

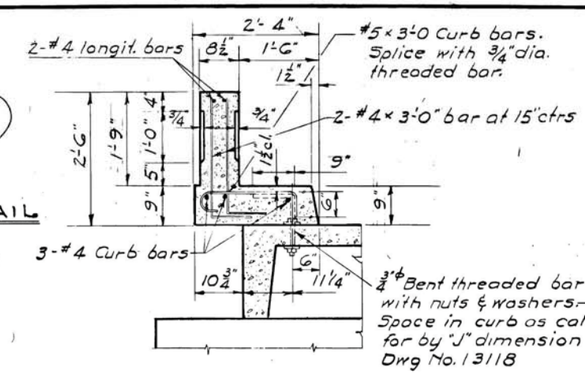

Section "D-D"

Scale 3/4" = 1'-0"

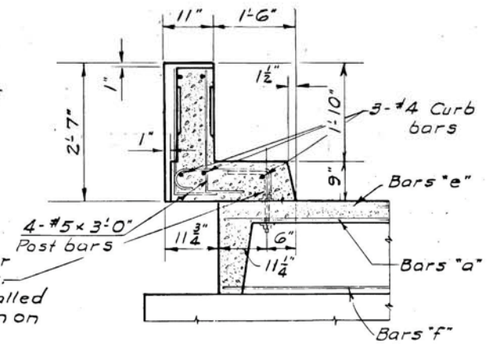

Section "E-E"

Scale 3/4" = 1'-0"

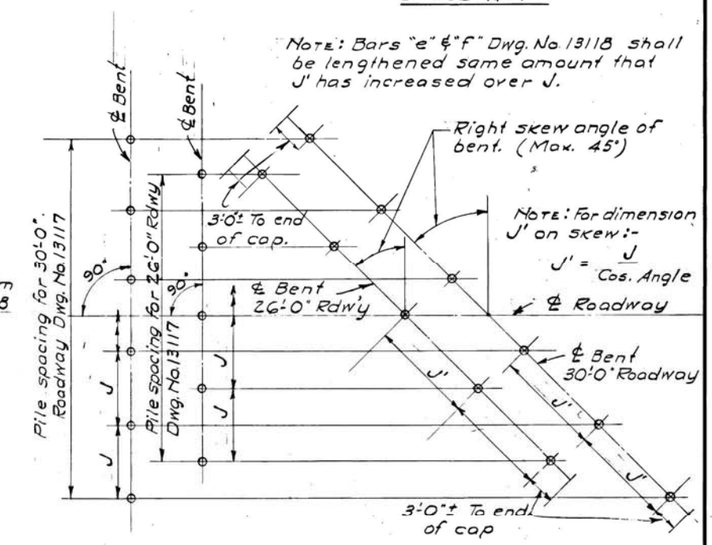

Pile Layout For Skewed Bents

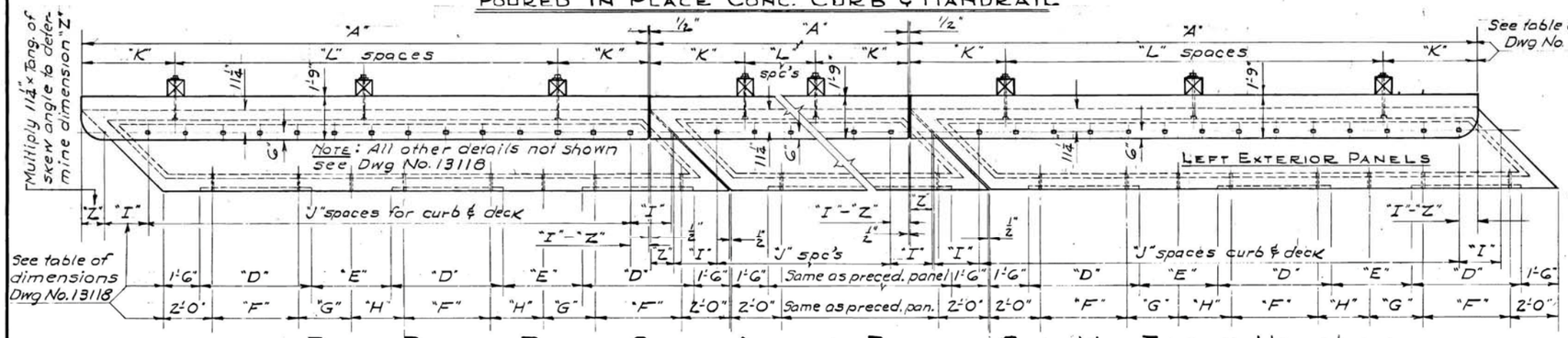

Part Plan - Right Skew Angle - Precast Curb With Timber Handrail

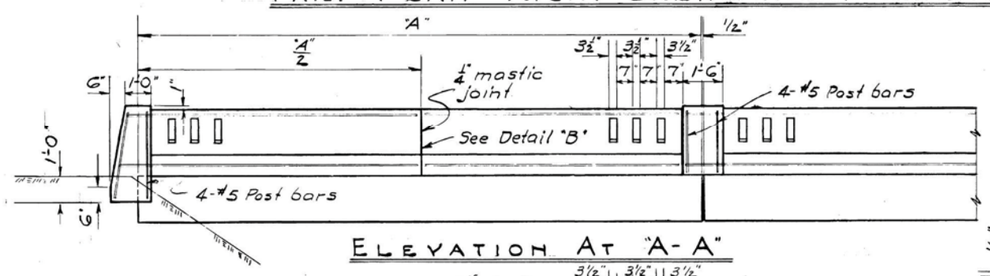

Elevation At "A-A"

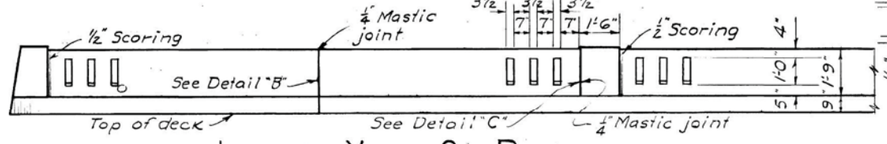

Inside View Of Rail

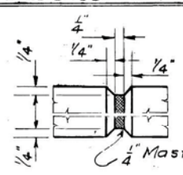

Detail "B"

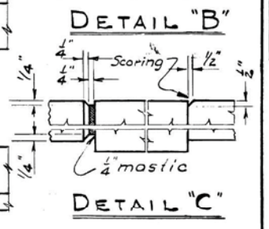

Detail "C"

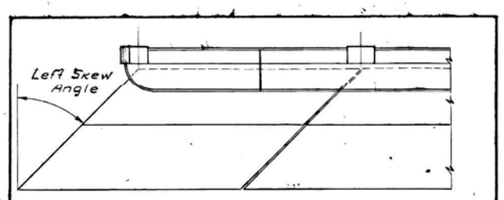

Note: All details same as shown in opposite skew angle in large views on this dwg.

Part Plan - Left Skew Angle For Both Types Curb & Handrail

DATE	REVISION

APPROVED: Jesse D. Merchant
BRIDGE ENGINEER

DESIGNED F.G. CHECKED
DRAWN F.G. CALC. BOOK

OREGON STATE HIGHWAY DEPARTMENT
BRIDGE DIVISION

STANDARD PILE TRESTLE FOR SKEWED PRECAST CONCRETE DECK SECT. & POURED IN PLACE HANDRAIL 26' & 30' ROADWAY

GENERAL DETAILS

DATE MARCH 18, 1958 SHEET 3 OF 3

BRIDGE NO. STANDARD DRAWING NO. 14004

5-111

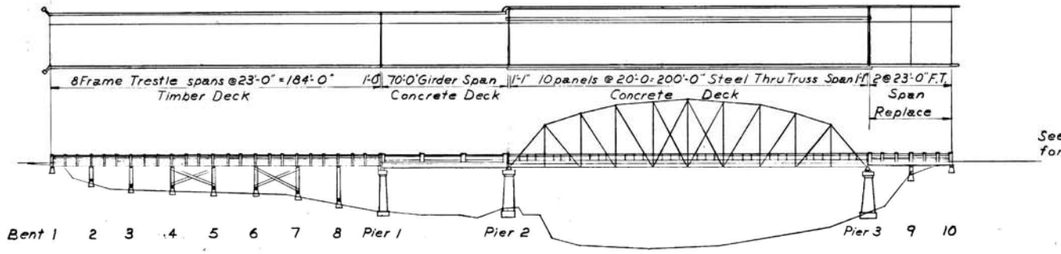

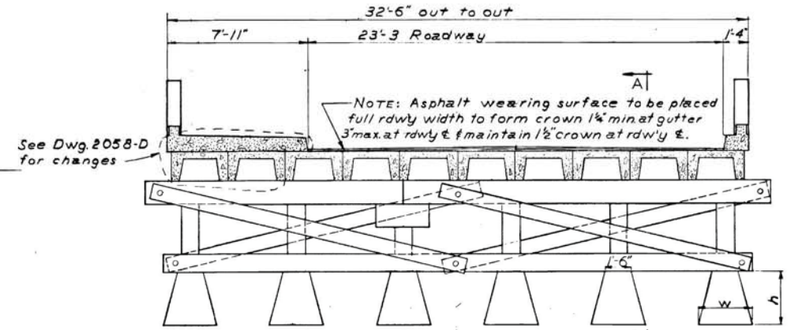

ELEVATION BENT

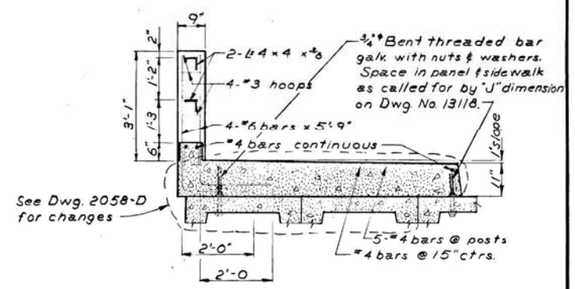

SECTION THRU SIDEWALK
Scale: ½" = 1'-0"

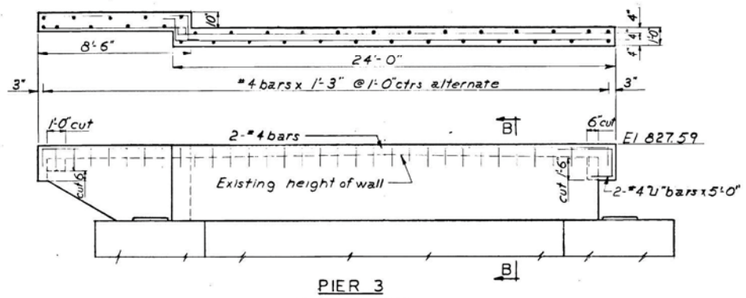

PIER 3
Scale: ¼" = 1'-0"

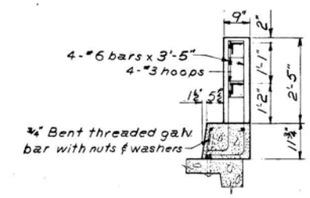

SECTION THRU RAIL
Scale: ½" = 1'-0"

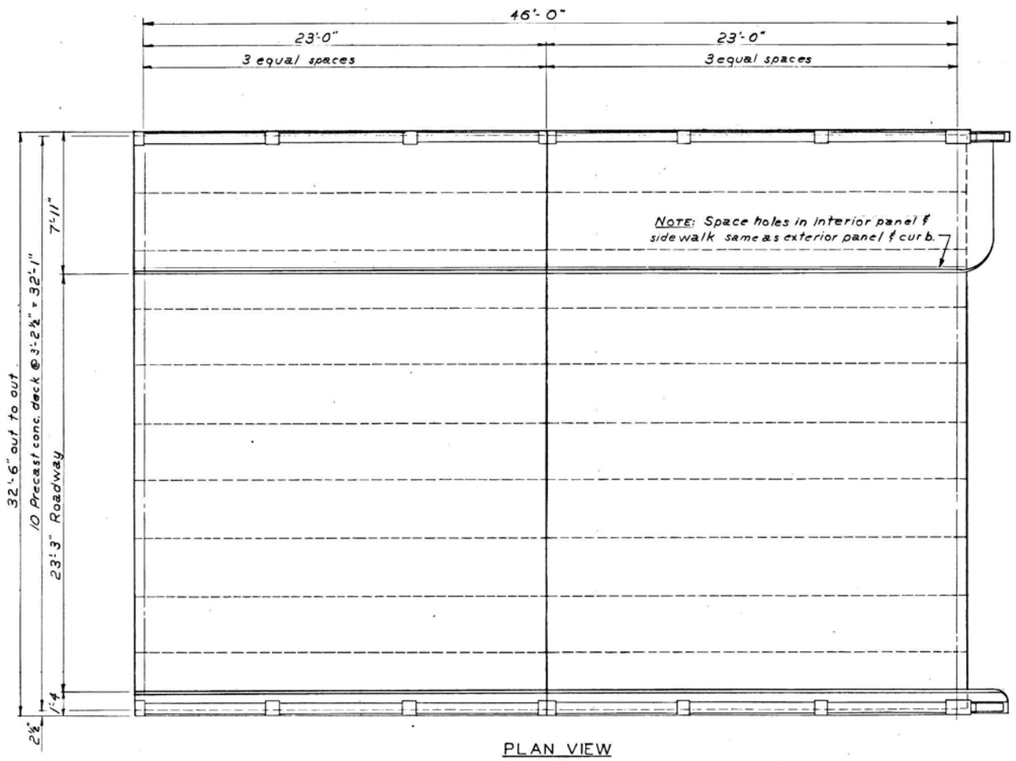

PLAN VIEW

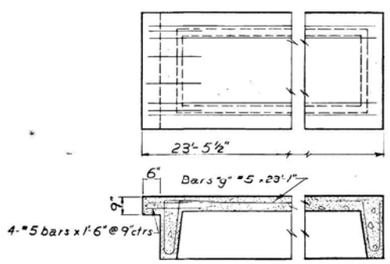

TYPICAL PANEL
Scale: ½" = 1'-0"

FOOTING DATA

h	w	Cu ft.
1'-0"	3'-2"	5.66
2'-0"	3'-2"	11.32
3'-0"	3'-2"	17.00
4'-0"	3'-6"	26.33
5'-0"	3'-9"	36.55
6'-0"	4'-0"	48.50
Over 6'	4 h + 18"	

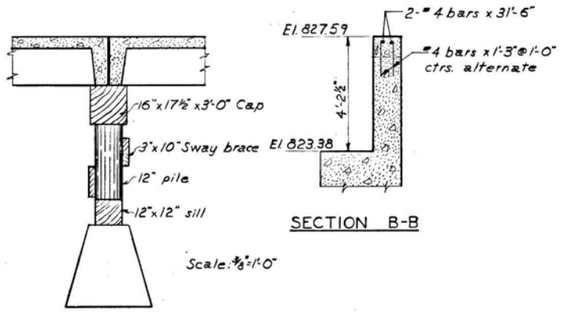

SECTION A-A

SECTION B-B

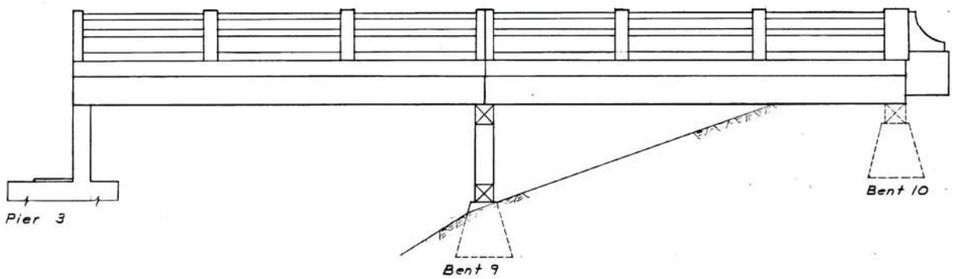

ELEVATION
Scale: 1" = 4'-0"

NOTE:
For additional changes from this drawing see Drawing 2058-D

APPROVED: BRIDGE ENGINEER	OREGON STATE HIGHWAY DEPARTMENT BRIDGE DIVISION
ASS'T. STATE HIGHWAY ENGINEER	MILL CITY BRIDGE SANTIAM RIVER MARION & LINN COUNTIES
STATE HIGHWAY ENGINEER	GENERAL DETAILS
DESIGNED RK CHECKED / DRAWN RK CALC. BOOK 522	DATE JAN 13 1960 BRIDGE NO. 2058 SHEET 1 OF 5 / ACCOMPANIED BY DWGS. 8956, 13117, 13118 & 14004 DRAWING NO. 15549