LINN COUNTY ENVIRONMENTAL HEALTH PROGRAM
PO BOX 100, 315 SW 4TH AVE, 2ND FLOOR, ALBANY, OR 97321
PHONE (541) 967-3821 FAX (541) 924-6904
http://www.co.linn.or.us/health/eh/eh.htm

FACT SHEET: CONSTRUCTION/INSTALLATION PERMITS

GENERAL INFORMATION

Installation permits are issued for construction of new sewage disposal systems to serve new site development. A favorable Site Evaluation for the property must be completed and issued before applying for an Installation permit. Plans for construction of the system must be submitted with the application.

Installation permits are only issued to the owner of the property, a contract purchaser in control of the property, or the owner's legal representative. A contractor may apply for the owner, but the contractor must provide a copy of the contract for the work, and the permit will be issued in the owner's name.

Permits expire one year after the date of issuance. Permits may be renewed or reinstated by the original permittee**;** they must be renewed before they expire or reinstated within one year after the expiration date of the permit. Permits may be transferred from the original permittee to a new property owner **if the new owner applies before the original permit expires, and if no other changes in the permit are needed.** Permit transfer does not extend the valid period before permit expiration.

In the event that an application is incomplete and additional action by or information from the applicant is required for completion, we will close the file one year after the application date and the application fee will be forfeit. A new application and fee will be required to re-activate the file.

APPLICATION INSTRUCTIONS

1. Have a completed Site Evaluation for an on-site sewage disposal system.
2. Gather the required documents for an application. This includes the following:
    - On-Site Sewage Disposal System Application and Land Use Compatibility Statement (LUCS)
    - Report of Evaluation for On-Site Sewage Disposal
    - Aerial Photo, Application Plot Plan, and Application System Plan
    - Sample Plot Plan and Sample System Plan/Elevation Profile
    - Stakeout Guide if you are preparing your own plans or are installing your own system
    - On-Site System Material List
    - Preserve Your Suitable Disposal Areas: Know Your Setbacks guide
    - Self Installer's Guide (Optional)
3. Fill out the application and stake out the system. All systems must be staked out in order to accurately complete the Application System Plan. Any stakeout is subject to a field inspection.
4. Return the completed application and pay the permit fee. The completed application will include the following:
    - On-Site Sewage Disposal System Application and Land Use Compatibility Statement (LUCS)
    - Application Plot Plan, Application System Plan, Elevation Profile, and tank schematic with float switch settings if pumping is required (Obtain this from the manufacturer of the tank you have selected)
    - On-Site System Material List
    - Any additional, required information needed for the installation of a Pressurized Distribution system, Capping Fill, Sand Filter or ATT
5. We will then review the application and, if necessary, visit the site and review the stakeout. If all the information is complete and correct, we will issue the permit to install the system. If we need additional information, we will contact you.

LAND USE COMPATIBILTY STATEMENT

A favorable Land Use Compatibility Statement (LUCs) must be received before we can issue or sign off on any permit. Upon receipt, your application will be forwarded to the local Planning Authority for completion of the LUCs. If the LUCs is not approved, or otherwise not favorable, you will be notified prior to us proceeding with your application. Once notified, you may choose to withdraw your application and request a refund, or ask that we place your application on hold until any conditions are met.

TIMELINES AND FEES

We will respond to applications for installation permits within 20 days after the completed application is received. Permits are sent out or can be picked up at the Environmental Health office as soon as the paperwork is completed.

- Fees are indicated on a separate fee schedule.
- Permit fees for commercial systems are based on system size and type.
- A portion of each application fee is paid to the Oregon Department of Environmental Quality to support statewide program administration and training. Please see the current Linn County Fee Schedule for the current surcharge amount.
- If preparation for the evaluation has not been completed when the sanitarian arrives and the work must be rescheduled, a re-inspection fee may be charged.

CONSTRUCTION SEASON

Generally, the installation of the system is only allowed during the summer and fall months, when soil conditions are dry. This helps to ensure that the system will function satisfactorily. Exceptions to this rule may be made on a case-by-case basis.

SELF-INSTALLERS

Sewage disposal systems may be installed either by a licensed sewage disposal service, or by the property owner. Please notify our office if you intend to install your own system so we can provide you with additional information and consultation.

LINN COUNTY ENVIRONMENTAL HEALTH PROGRAM
http://www.co.linn.or.us/health/eh/eh.htm

PO BOX 100
315 SW 4TH AVE, 2ND FLOOR
ALBANY, OR 97321
PHONE: (541) 967-3821
FAX: (541) 924-6904

OFFICE USE ONLY

DATE RECEIVED:	RECEIVED BY:
FEE:	RECEIPT #:
TRANSFER TO/FROM:	
RECORD #:	
PIN:	

APPLICATION FOR ON-SITE SEWAGE DISPOSAL

A. OWNER INFORMATION

☐ Title holder ☐ Contract purchaser ☐ Legal Representative

Name | Contact Person *(if owner is a Business, Trust, etc.)*

Mailing address | City | State | Zip

Phone Number | Second Phone Number

B. APPLICANT INFORMATION *(if different from owner)*

☐ Authorization or contract enclosed

Name *(include name of contact person if applicant is a Business, Trust, etc)* | Relationship to owner

Mailing address | City | State | Zip

Phone Number | Second Phone Number

C. PROPERTY DESCRIPTION

Township | Range | Section | Tax Lot | Property size *(Acreage)*

Site Address *(☐ existing address, or ☐ address of adjacent property)* | City | State | Zip

Directions to Property

WATER SUPPLY

☐ Existing Private Well/Spring ☐ Proposed Private Well/Spring ☐ Public Water System

D. APPLICATION TYPE

☐ Site Evaluation ☐ Major Repair Permit ☐ Major Alteration Permit ☐ Authorization Notice

☐ Site Evaluation Amendment ☐ Minor Repair Permit ☐ Minor Alteration Permit ☐ Planning Review

☐ Construction/ Installation Permit ☐ Permit transfer ☐ Permit renewal

APPLICATION FOR ON-SITE SEWAGE DISPOSAL

OFFICE USE ONLY
RECORD #:
PIN:

E. PROPOSAL

Does this application concern an existing system? ☐ Yes ☐ No **Is the system failing?** ☐ Yes ☐ No

What is connected to the system?

☐ Single Family Residence – # of Bedrooms: ☐ Add. Hardship Residence – # of Bedrooms:

☐ Commercial – Type of business:

Max # of Shifts: Max # of employees/Shift:

Fixtures *(type and # of each)*:

What will be connected to the system after any changes are made?

☐ Single Family Residence – # of Bedrooms: ☐ Add. Hardship Residence – # of Bedrooms:

☐Commercial – Type of business:

Max # of Shifts: Max # of employees/Shift:

Fixtures *(type and # of each)*:

Will the size of the property change? ☐ Yes ☐ No **Proposed lot size** *(acres)***:**

What portion of the property does this application concern? *(West side, Parcel A, etc)***:**

****When will the site be ready for inspection?**** *(Test pits ready/system uncovered, etc)*:

Specific Proposal – *What do you want to do on this property?*

F. REQUIRED PLOT PLAN INFORMATION

*Check each **existing or proposed** feature below as: **N/A** (not applicable) or **Shown** (labeled on your plot plan)*

N/A	Shown		N/A	Shown	
☐	☐	All wells/water lines	☐	☐	Lakes, springs, streams, ditches, etc.
☐	☐	Neighboring wells/waterlines	☐	☐	Neighboring waterbodies (w/in 100')
☐	☐	Buildings and fences	☐	☐	Field drainage tiles (French drain, etc.)
☐	☐	Septic tanks & drainfields	☐	☐	Test pits (w/ distance to property lines)
☐	☐	Roads, driveways, parking	☐	☐	Direction of Slope
☐	☐	Areas of excavation (cuts/fills)	☐	☐	Easements, deed restrictions, etc

By my signature, I certify that all information provided on this application and the accompanying plot plan or system plan is correct; and I hereby grant the Department of Environmental Quality and its authorized agents permission to enter onto the above-described property for the purpose of this application.

Owner Signature Date

Applicant Signature Date

315 SW 4th Ave, 2nd Floor
PO Box 100 Albany, OR 97321

Linn County Department of Health Services
Environmental Health Program

Phone (541) 967-3821
Fax (541) 924-6904

Rec. # _____

ON-SITE SYSTEM MATERIAL LIST

(DIRECTIONS & DEFINITIONS ON BACK)

ON THE PROVIDED SCALED PLAN OF THE APPROVED DISPOSAL AREA, SHOW THE SYSTEM LAYOUT, INCLUDING TRENCH LOCATIONS, LENGTHS, AND RELATIVE ELEVATIONS. SUBMIT IT ALONG WITH THIS LIST OF MATERIALS AND AN ELEVATION PROFILE AS PART OF THE PERMIT APPLICATION .

Township _____ Range _____ Section _____ Map Lot _____ Owner _____

1. SEPTIC TANKS

☐ SEPTIC TANK: MFG. _____ CAPACITY _____ MATERIAL _____

☐ DOSING TANK: MFG. _____ CAPACITY _____ MATERIAL _____

☐ SEPTIC/DOSING TANK: ☐ SINGLE COMPARTMENT ☐ TWO COMPARTMENT ☐ FLOW-THROUGH

MFG. _____ CAPACITY _____ MATERIAL _____

Mfg.'s Specs. Included

2. PUMPING ASSEMBLIES

SIPHON: MFG. _____ MODEL _____ DISCHARGE DIAM _____ ☐

PUMP 1: MFG. _____ MODEL _____ (INCLUDE PERFORMANCE CURVE) ☐

PUMP 2: MFG. _____ MODEL _____ (INCLUDE PERFORMANCE CURVE) ☐

CONTROL PANEL: MFG. _____ MODEL _____ ☐

HYDROSPLITTER: MFG. _____ MODEL _____ (INCLUDE ORIFICE CALCULATIONS) ☐

EFFLUENT FILTER: MFG. _____ MODEL _____ ☐

DISTRIBUTION VALVE: MFG. _____ MODEL _____ ☐

3. EFFLUENT TRANSPORT PIPING

☐ GRAVITY EFFLUENT SEWER: LENGTH _____ DIAMETER _____ MATERIAL _____ FALL (IN INCHES) _____

☐ PRESSURE PIPING: LENGTH _____ DIAMETER _____ MATERIAL _____ PSI _____

4. DISPOSAL FIELD (DRAINFIELD)

DISTRIBUTION TECHNIQUE: ☐ EQUAL ☐ LOOP ☐ SERIAL ☐ PRESSURIZED

TOTAL LINEAR FOOTAGE: _____

DRAIN MEDIA: ☐ GRAVEL-LESS ABSORPTION METHOD ☐ ROCK & PIPE ☐ OTHER _____

TOTAL DEPTH _____ DEPTH BELOW PIPE _____

TRENCH DEPTH (FROM ORIGINAL GROUND SURFACE): MIN _____ MAX _____

CAPPING FILL DEPTH (DEPTH OF CAP): _____

SETBACKS FROM WELLS: SEPTIC TANK _____ SAND FILTER OR ATT UNIT _____ DRAINFIELD _____

5. DEWATERING SYSTEMS (IF REQUIRED)

☐ CURTAIN DRAIN ☐ TILE DEWATERING

TRENCH DEPTH: _____

DRAIN MEDIA: ☐ ROCK & PIPE ☐ OTHER_____

TOTAL DEPTH _____ DEPTH BELOW PIPE _____ ☐ FILTER FABRIC

PERFORATED PIPING: DIAMETER _____ MATERIAL _____

6. ADVANCED TREATMENT UNITS

☐ SAND FILTER ☐ RGF ☐ ATT: TYPE _____

ONSITE SYSTEM MATERIAL LIST INSTRUCTION SHEET

The Onsite System Material List is a necessary and important part of the pre-permit system plans. This document allows us to catch any potential problems before the system is installed and allows you to familiarize yourself with the materials and construction requirements for the system. This form must be completed, submitted, and approved before we can issue a permit. Once approved, this document becomes part of the permit and will be used to perform the inspection of your installed septic system.

MATERIAL LIST SECTION

1. **Tank information:** Enter septic tank, dosing tank, or septic/dosing tank information (you will not have a dosing tank if you are constructing a gravity-flow system).
   a. Mfg: Is the name of the manufacturer who made the tank.
   b. Capacity: Is the capacity of the tank in gallons.
   c. Material: Is what material the septic tank is constructed from (concrete, steel, polyethylene, etc…).
2. **Pumping information:** This section is only for systems that use pumps, siphons, or effluent filters. Please enter the data as appropriate or skip this section if your system does not have any of these components**. Be sure to include manufacturer's specifications for all sections that apply.**
   a. Siphon: If you are installing a siphon, enter the manufacturer (MFG), model, and discharge diameter.
   b. Pump: Enter the manufacturer (MFG) and model of the pump.
   c. Hydrosplitter: If you are installing a hydrosplitter, enter the manufacturer and model. Hydrosplitter orifice selections must be obtained from the manufacturer.
   d. Effluent filter: If you are installing an effluent filter, enter the manufacturer and model information.
   e. Distribution valve: If you are installing a distribution valve, enter the manufacturer and model information.
3. **Effluent transport piping information:** The effluent sewer is the pipe that connects the outlet of the septic tank to the drainfield. The pressure piping is the pipe between the pump discharge and the drainfield.
   a. Enter information about the gravity effluent sewer as follows:
      Length: Is the length of the effluent sewer.
      Diameter: The diameter of the effluent sewer.
      Material: Is the actual material from which the pipe is made, and its specification number -- an example would be PVC 3034.
      Fall: Is the difference in elevation, in inches, between the effluent sewer pipe at the outlet of the septic tank and the header pipe where it leaves the d-box.
   b. Enter information about pressure transport piping as follows:
      Length: Enter the length of the pressure piping from the tank to the drainfield, the hydrosplitter, or the start of the pressure network.
      Diameter: Enter the diameter of the pressure piping that you are going to use.
      Material: Enter the actual material from which the pipe is made and its specification number -- an example would be PVC 1120.
      PSI: Enter the pressure rating (pounds per square inch or PSI) of the pressure piping that you are going to use.
4. **Disposal trenches:**
   a. Distribution technique: Check the box next to the distribution technique you are going to use.
   b. Total Linear Footage: Is the total length of the perforated pipe, chambers, or other approved disposal media. It does not include headers or other solid pipe.
   c. Drain Media: Check the box to indicate which media you are going to use. Include the total depth of the drainfield rock (if it is being used), and the depth of the drainfield rock below the pipe.
   d. Trench Depth: Is the minimum and maximum depth of the trench below the original ground surface.
   e. Capping Fill Depth: If you are constructing a capping fill drainfield enter the depth of the fill material above the original ground surface.
   f. Setbacks from Wells: Enter the distance (in feet) from the well to the septic tank, to the sand filter or other treatment device, and to the drainfield.
5. **Dewatering Systems:** (If used)
   a. Check the box next to the dewatering system that is required.
   b. Trench Depth: Is the depth of the dewatering trench below the original ground surface.
   c. Drain Media: Check the box to indicate which media you are going to use. Include the total depth of the drainfield rock (if it is being used), and, for a curtain drain, the depth of the drainfield rock below the pipe. If a curtain drain is required, filter fabric must be placed above the drain media.
   d. Perforated Piping: Enter the diameter and material of the perforated piping that will be used.

SAMPLE ELEVATION PROFILE

(Not all possible configurations shown)

Submit an elevation profile along with your Application Plot Plan and Application System Plan. Below are several examples of elevation profiles and the required elevation readings. If your system requires a pump, a Float Settings Worksheet is also required.

1. Standard Gravity System

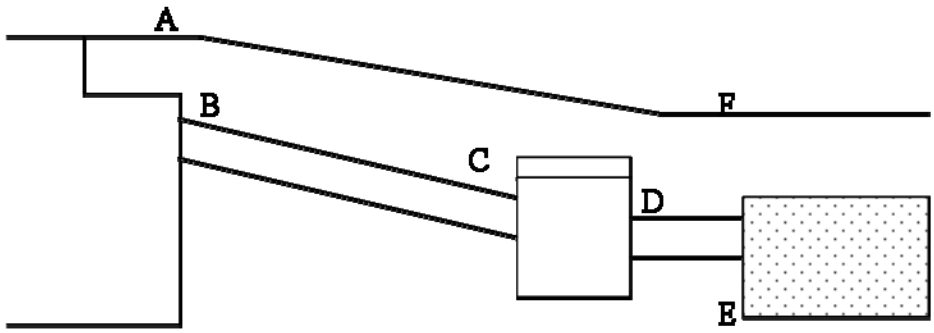

Required Elevations

A – Ground surface above tank
B – Tank outlet
C – Inlet into box
D – Header pipe
E – Bottom of disposal trench
F – Ground surface above first disposal trench

2. Capping Fill System

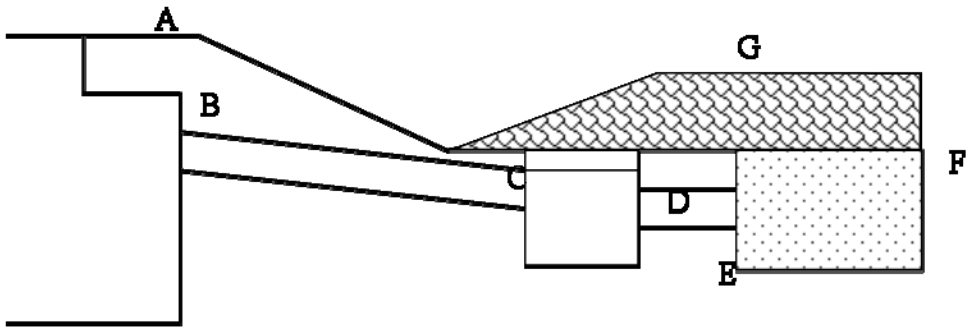

Required Elevations

A – Ground surface above tank
B – Tank outlet
C – Inlet into box
D – Header pipe
E – Bottom of disposal trench
F – Original ground surface above first disposal trench
G – Ground surface after placement of cap

3. Effluent Lift Pump System

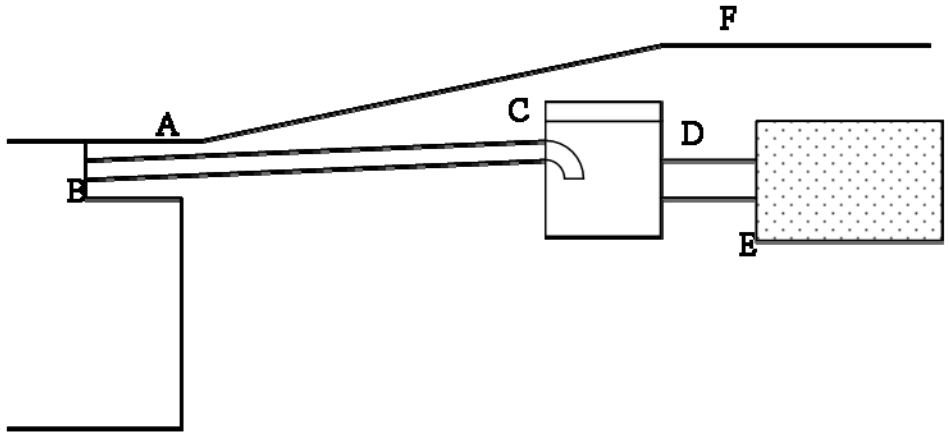

Required Elevations

A – Ground surface above tank
B – Pressure line outlet
C – Pressure line into box
D – Header pipe
E – Bottom of disposal trench
F – Ground surface above first disposal trench

County Courthouse, Room 115
PO Box 100 Albany, OR 97321

Linn County Department of Health Services

Environmental Health Program

Phone (541) 967-3821
Fax (541) 926-2060

SAMPLE SYSTEM PLAN

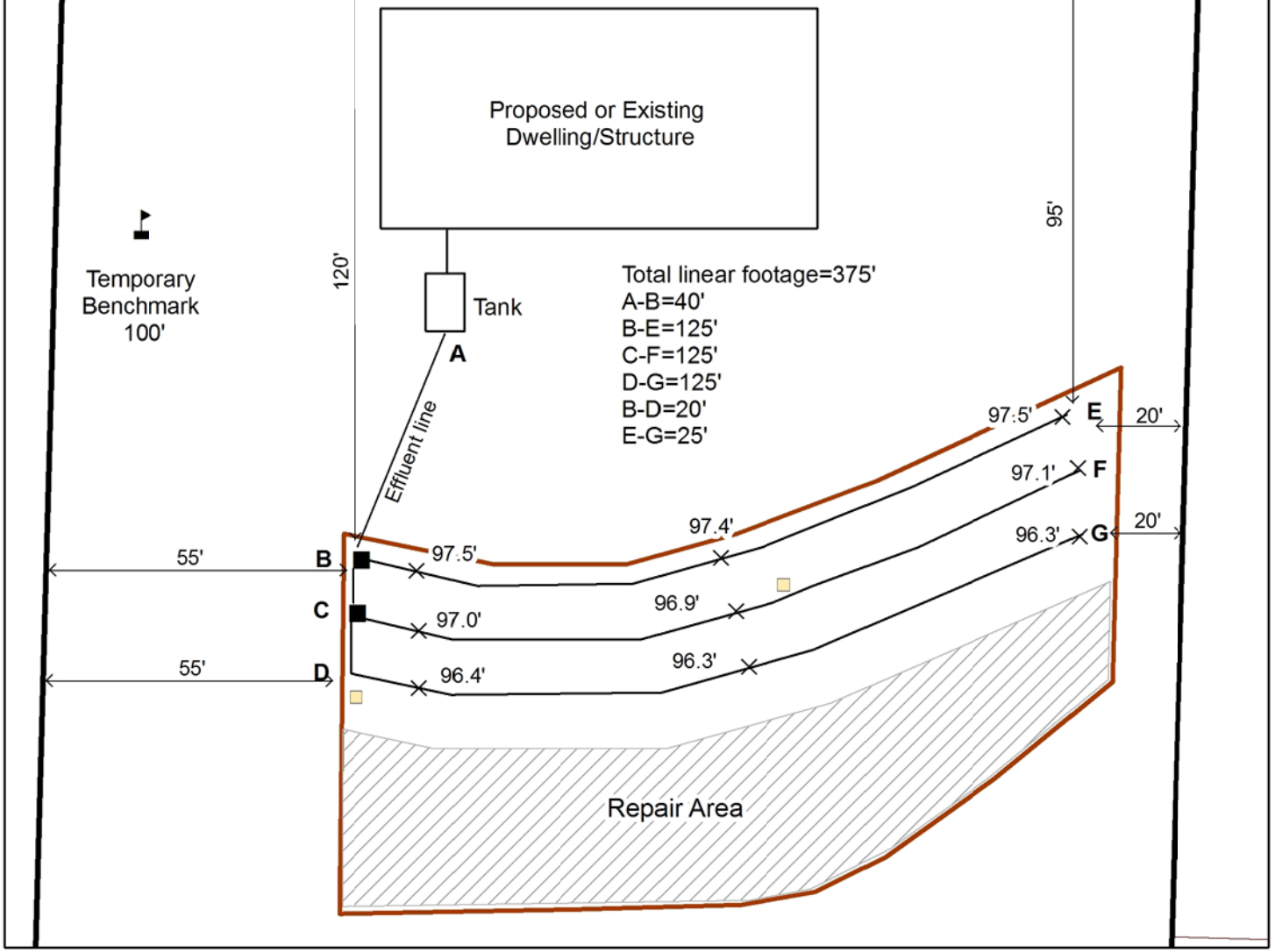

Application System Plan

Property ID: 00S00W00 00000
Record Number: 00000
Date Produced: 3/14/2008

Provide and check the following:

- ☐ Temporary benchmark or elevation control point
- ☐ Measurements from the ends of the outside disposal lines to a property line or other fixed point
- ☐ Line lengths indicated (total must equal required)
- ☐ Relative elevations (at least 3 per line)
- ☐ Effluent or pressure transport line located
- ☐ Area reserved for replacement system indicated

Legend

- Wells
- Test pits
- Disposal areas

N

1 inch equals 30 feet

Applicant's Name and Signature

Date

Preserve Your Suitable Disposal Areas: KNOW YOUR SETBACKS

A site evaluation is the first step in the process of obtaining a construction permit for an on-site sewage disposal system. For alteration and repair permits, we often waive the fee, formality and some of the restrictions of the site evaluation. Nevertheless, we also delineate an "approved disposal area" for every on-site permit. Two separate areas may be designated for the initial and replacement systems, or a single large disposal area may be designated for both. Sometimes site and soil conditions necessitate the approval of two different types of systems for the initial and replacement areas. Alteration and repair permits may or may not have a designated replacement area.

An on-site sewage disposal system should effectively do two things: Treat and dispose of septic tank effluent. It's obvious when the disposal part isn't working, and we want to make sure the treatment part works to avoid ground water pollution. An approved disposal area, for either the initial or replacement system, may not be altered in any way that will impact the installation or the proper functioning of a disposal system. A system must be installed in native, unaltered soil. Severe soil or site alteration may render an area unsuitable for sewage disposal and void any previous site approvals. The two major problems we find are soil disturbances and setback issues.

Oregon Administrative Rule 340-71-220(e) states that a site is only suitable for sewage disposal if it "… has not been filled or the soil has not been modified in a way that would, in the opinion of the Agent, adversely affect functioning of the system." Decisions about sites that have been disturbed must be made at the site and on a case-by-case basis. To avoid problems, do not cut, level or fill the approved area. Felling trees and pulling up stumps with big, heavy tractors on clayey soils in the winter rain is a recipe for voiding your approval. Laying a driveway through the middle of your approved area will usually void your approval. **Before making any changes to the approved area, call us for consultation at (541) 967-3821.**

Table 1 of Oregon Administrative Rule 340-71 lists all the necessary setbacks and is found on the other side of this form. We designate approved areas based on the information supplied on the plot plan with the application. If a feature that requires a setback, such as a neighbor's well, is not disclosed on the plot plan, the required setback may later invalidate the approval. Any changes to the site, such as drilling a new well, must adhere to the required setbacks or the approval may be voided. Different setbacks apply to different site and soil conditions. **If the setbacks that pertain to your site are unclear, call us for a consultation at (541) 967-3821, before making any changes near the approved area.**

The following are some general setbacks. They are by no means all the setbacks that apply to your site.

Setbacks from:	**Approved disposal area**	**Tanks, sand filter, effluent line etc.**
Wells (on or adjacent to property)	100'	50'
Year round water bodies	100'	50'
Seasonal water bodies	50'	50'
Downslope cuts	50'	25'
Water lines	10'	10'
Building foundations	10'	5'
Underground utilities	10'	
Property lines	10'	5'

See the back side of this page for complete list.

Table 1

OAR 340-071-0220

MINIMUM SEPARATION DISTANCES

Items Requiring Setbacks	From Sewage Disposal Area, Including Replacement Area	From Septic Tank and Other Treatment Units, Effluent Sewer and Distribution Units
1. Groundwater Supplies	100'	50'
2. Temporarily Abandoned Wells	100'	50'
3. Springs: ● Upgradient ● Downgradient	50' 100'	50' 50'
4. Surface Public Waters: * ● Year Round ● Seasonal	100' 50'	50' 50'
5. Intermittent Streams: ● Piped (watertight not less than 25' from any part of the on-site system) ● Unpiped	20' 50'	20' 50'
6. Groundwater Interceptors: ● On a slope of 3% or less ● On slope greater than 3% ○ Upgradient ○ Downgradient	20' 10' 50'	10' 5' 10'
7. Irrigation Canals: ● Lined (watertight canal) ● Unlined: ○ Upgradient ○ Downgradient	25' 25' 50'	25' 25' 50'
8. Cuts Manmade in Excess of 30 inches (top of downslope cut): ● Which intersect layers that limit effective soil depth within 48 inches of surface ● Which do not intersect layers that limit effective soil depth	50' 25'	25' 10'
9. Escarpments: ● Which intersect layers that limit effective soil depth ● Which do not intersect layers that limit effective soil depth	50' 25'	10' 10'
10. Property Lines	10'	5'
11. Water Lines	10'	10'
12. Foundation Lines of any Building, Including Garages and Out Buildings	10'	5'
13. Underground Utilities	10'	--

*This does not prevent stream crossing of pressure effluent sewer.